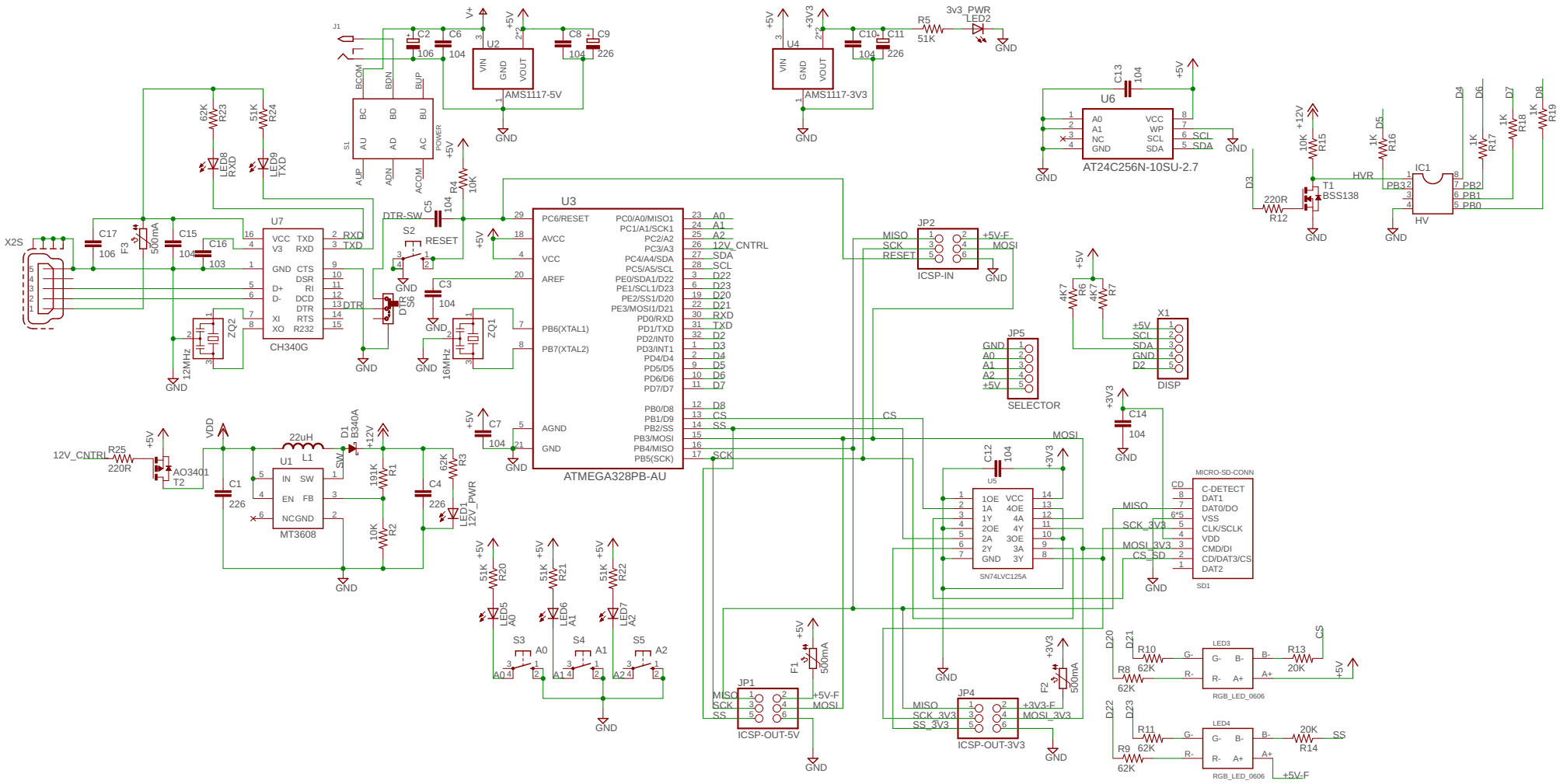
U3
ATMEGA328PB-AU
PC6/RESET
AVCC
VCC
AREF
PB6(XTAL1)
PB7(XTAL2)
AGND
GND
PC0/A0/MISO1
PC1/A1/SCK1
PC2/A2
PC3/A3
PC4/A4/SDA
PC5/A5/SCL
PE0/SDA1/D22
PE1/SCL1/D23
PE2/SS1/D20
PE3/MOSI1/D21
PD0/RXD
PD1/TXD
PD2/INT0
PD3/INT1
PD4/D4
PD5/D5
PD6/D6
PD7/D7
PB0/D8
PB1/D9
PB2/SS
PB3/MOSI
PB4/MISO
PB5(SCK)
12V_CNTRL
CS
SCK
U7
CH340G
VCC
V3
GND
D+
D-
XI
XO
TXD
RXD
CTS
DSR
RI
DCD
DTR
RTS
R232
X2S
J1
S1
BCOM
BDN
BUP
BC
BD
BU
AU
AD
AC
AUP
ADN
ACOM
POWER
U2
AMS1117-5V
U4
AMS1117-3V3
VIN
VOUT
U6
AT24C256N-10SU-2.7
A0
A1
NC
VCC
WP
SCL
SDA
IC1
HV
PB3
PB2
PB1
PB0
T1
BSS138
HVR
JP2
ICSP-IN
MISO
SCK
RESET
MOSI
JP5
SELECTOR
GND
A0
A1
A2
+5V
X1
DISP
SCL
SDA
D2
U5
SN74LVC125A
1OE
1A
1Y
2OE
2A
2Y
3OE
3A
3Y
4OE
4A
4Y
MICRO-SD-CONN
SD1
C-DETECT
DAT1
DAT0/DO
VSS
CLK/SCLK
VDD
CMD/DI
CD/DAT3/CS
DAT2
SCK_3V3
MOSI_3V3
CS_SD
JP1
ICSP-OUT-5V
JP4
ICSP-OUT-3V3
SS_3V3
MOSI_3V3
+5V-F
+3V3-F
LED3
RGB_LED_0606
LED4
U1
MT3608
IN
SW
EN
FB
NC
GND
L1
22uH
D1
B340A
T2
AO3401
R25
220R
VDD
12V_PWR
LED1
S2
RESET
DTR-SW
S6
DTR
S3
S4
S5
A0
A1
A2
LED5
LED6
LED7
LED8
RXD
LED9
TXD
LED2
3v3_PWR
ZQ1
16MHz
ZQ2
12MHz
F1
F2
F3
500mA
X2S
C17
C15
C16
C1
C2
C3
C4
C5
C6
C7
C8
C9
C10
C11
C12
C13
C14
R1
R2
R3
R4
R5
R6
R7
R8
R9
R10
R11
R12
R13
R14
R15
R16
R17
R18
R19
R20
R21
R22
R23
R24
D3
D4
D5
D6
D7
D8
D20
D21
D22
D23
CS
SS