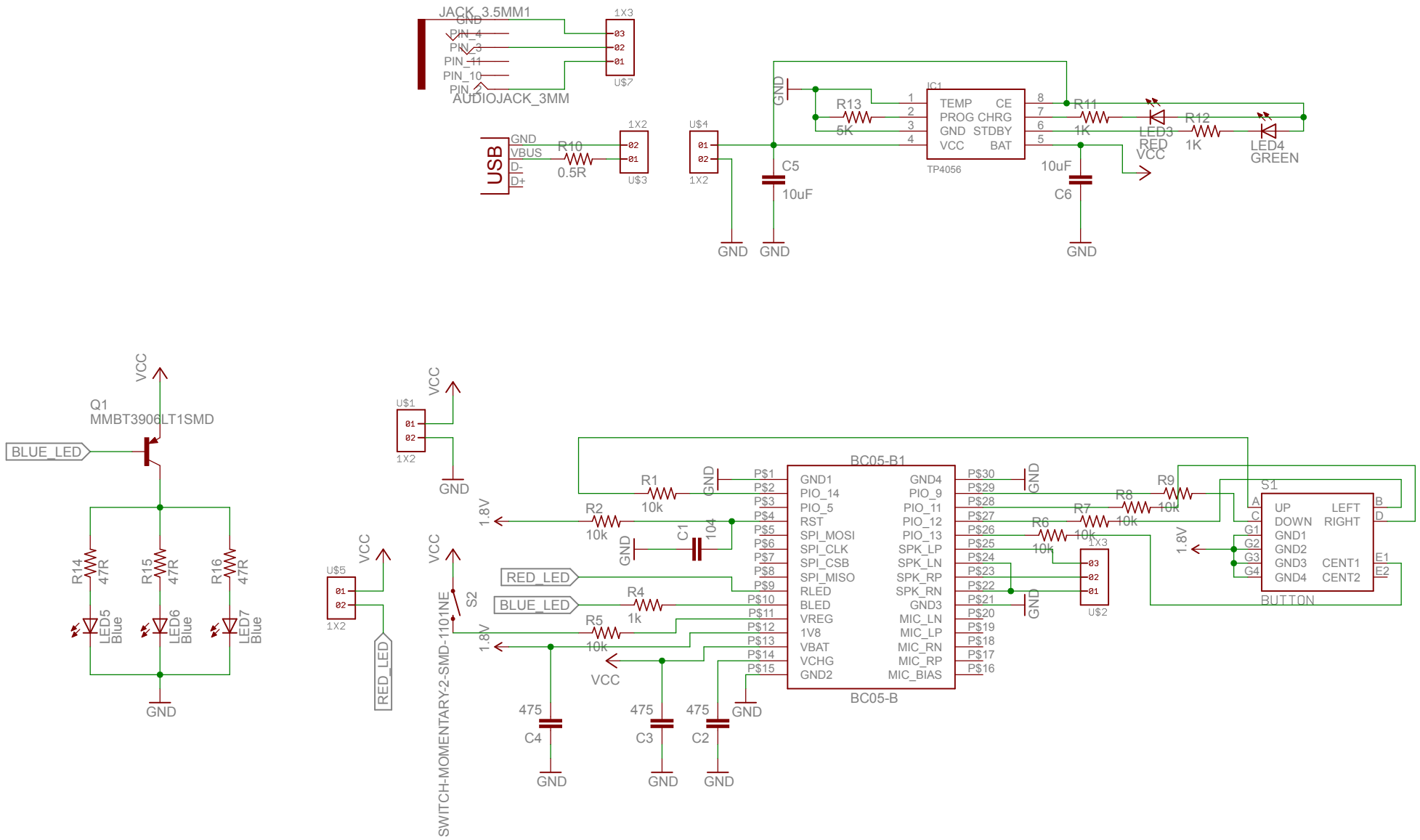
JACK_3.5MM1
GND
PIN_4
PIN_3
PIN_11
PIN_10
PIN_2
AUDIOJACK_3MM
1X3
U$7
USB
GND
VBUS
D-
D+
R10
0.5R
1X2
U$3
U$4
1X2
C5
10uF
GND
R13
5K
IC1
TEMP
PROG
GND
VCC
CE
CHRG
STDBY
BAT
TP4056
R11
1K
LED3
RED
VCC
R12
1K
LED4
GREEN
10uF
C6
Q1
MMBT3906LT1SMD
BLUE_LED
VCC
R14
47R
R15
47R
R16
47R
LED5
Blue
LED6
Blue
LED7
Blue
U$1
1X2
U$5
1X2
RED_LED
S2
SWITCH-MOMENTARY-2-SMD-1101NE
1.8V
R1
10k
R2
10k
C1
104
R4
1k
R5
10k
BC05-B1
GND1
PIO_14
PIO_5
RST
SPI_MOSI
SPI_CLK
SPI_CSB
SPI_MISO
RLED
BLED
VREG
1V8
VBAT
VCHG
GND2
GND4
PIO_9
PIO_11
PIO_12
PIO_13
SPK_LP
SPK_LN
SPK_RP
SPK_RN
GND3
MIC_LN
MIC_LP
MIC_RN
MIC_RP
MIC_BIAS
BC05-B
P$1
P$2
P$3
P$4
P$5
P$6
P$7
P$8
P$9
P$10
P$11
P$12
P$13
P$14
P$15
P$30
P$29
P$28
P$27
P$26
P$25
P$24
P$23
P$22
P$21
P$20
P$19
P$18
P$17
P$16
R6
10k
R7
10k
R8
10k
R9
10k
1X3
U$2
S1
UP
DOWN
GND1
GND2
GND3
GND4
LEFT
RIGHT
CENT1
CENT2
A
C
G1
G2
G3
G4
B
D
E1
E2
BUTTON
475
C4
C3
C2