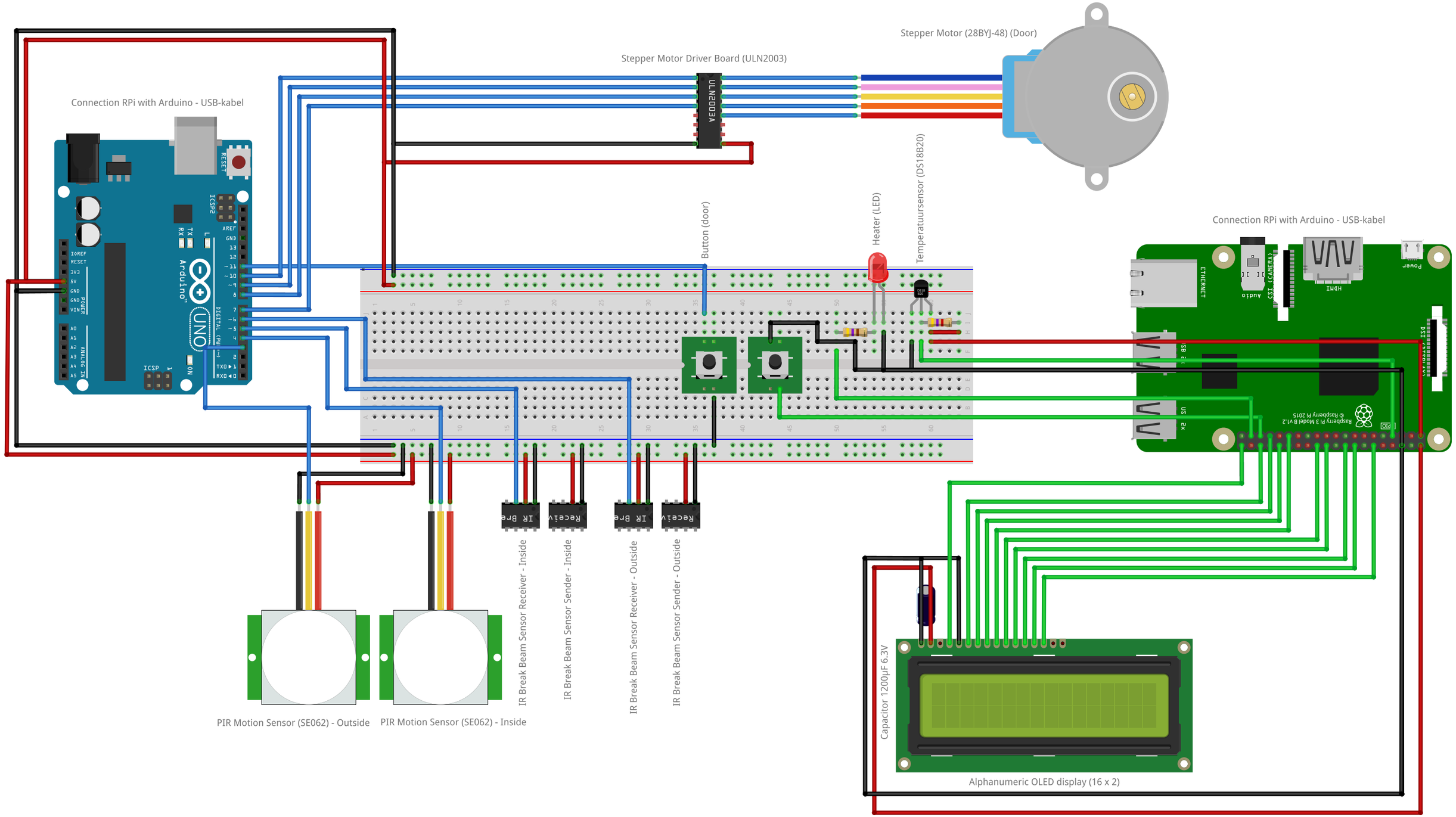
Stepper Motor (28BYJ-48) (Door)
Stepper Motor Driver Board (ULN2003)
ULN2003A
Connection RPi with Arduino - USB-kabel
Button (door)
Heater (LED)
Temperatuursensor (DS18B20)
Connection RPi with Arduino - USB-kabel
IR Break Beam Sensor Receiver - Inside
IR Break Beam Sensor Sender - Inside
IR Break Beam Sensor Receiver - Outside
IR Break Beam Sensor Sender - Outside
PIR Motion Sensor (SE062) - Outside
PIR Motion Sensor (SE062) - Inside
Capacitor 1200µF 6.3V
Alphanumeric OLED display (16 x 2)
fritzing