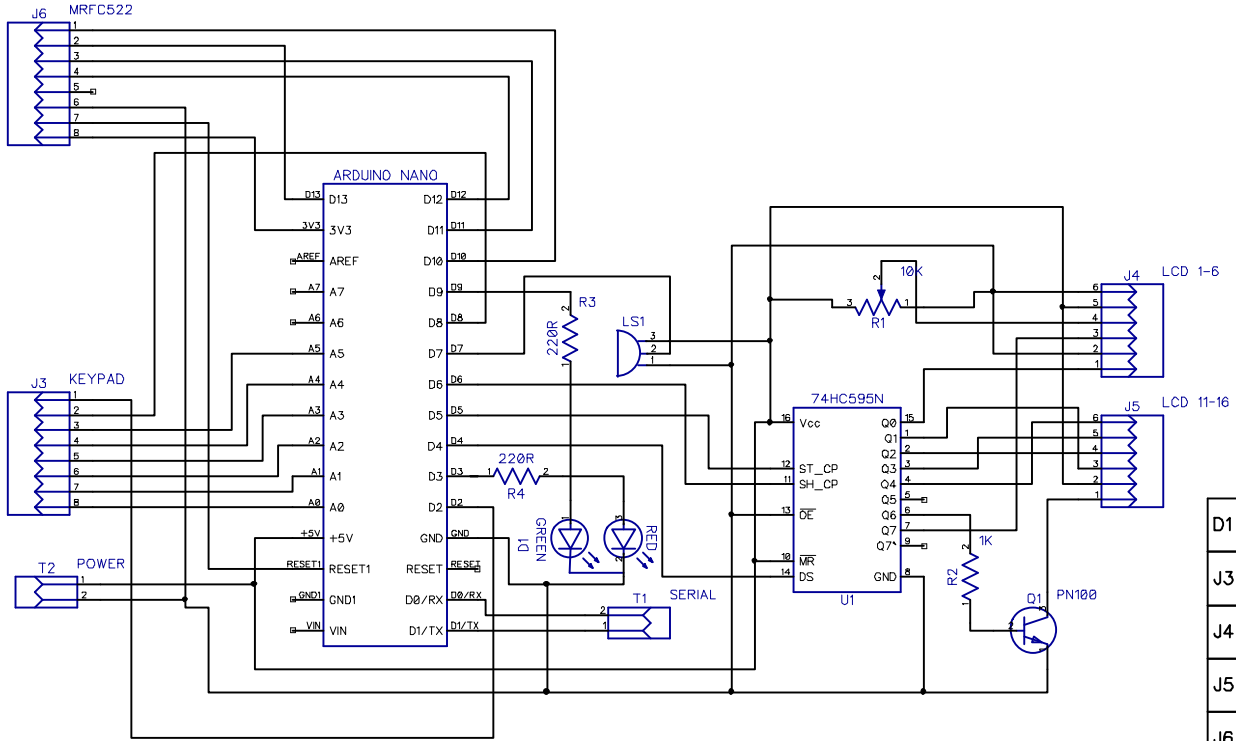

D1		BI-COLOUR LED
J3	KEYPAD	HEADER 8 PIN
J4	LCD 1-6	HEADER 6 PIN
J5	LCD 11-16	HEADER 6 PIN
J6	MRFC522	HEADER 8 PIN
LS1		PASSIVE BUZZER
Q1	PN100	
R1	10K	TRIMPOT
R2	1K	RESISTOR
R3	220R	RESISTOR
R4	220R	RESISTOR
T1	SERIAL	2 PIN TERMINAL
T2	POWER	2 PIN TERMINAL
U1		74HC595N
U2	ARDUINO NANO	

V 1.0	HOME ALARM (KEYPAD UNIT) - ALLAN MURRAY	04/04/15		