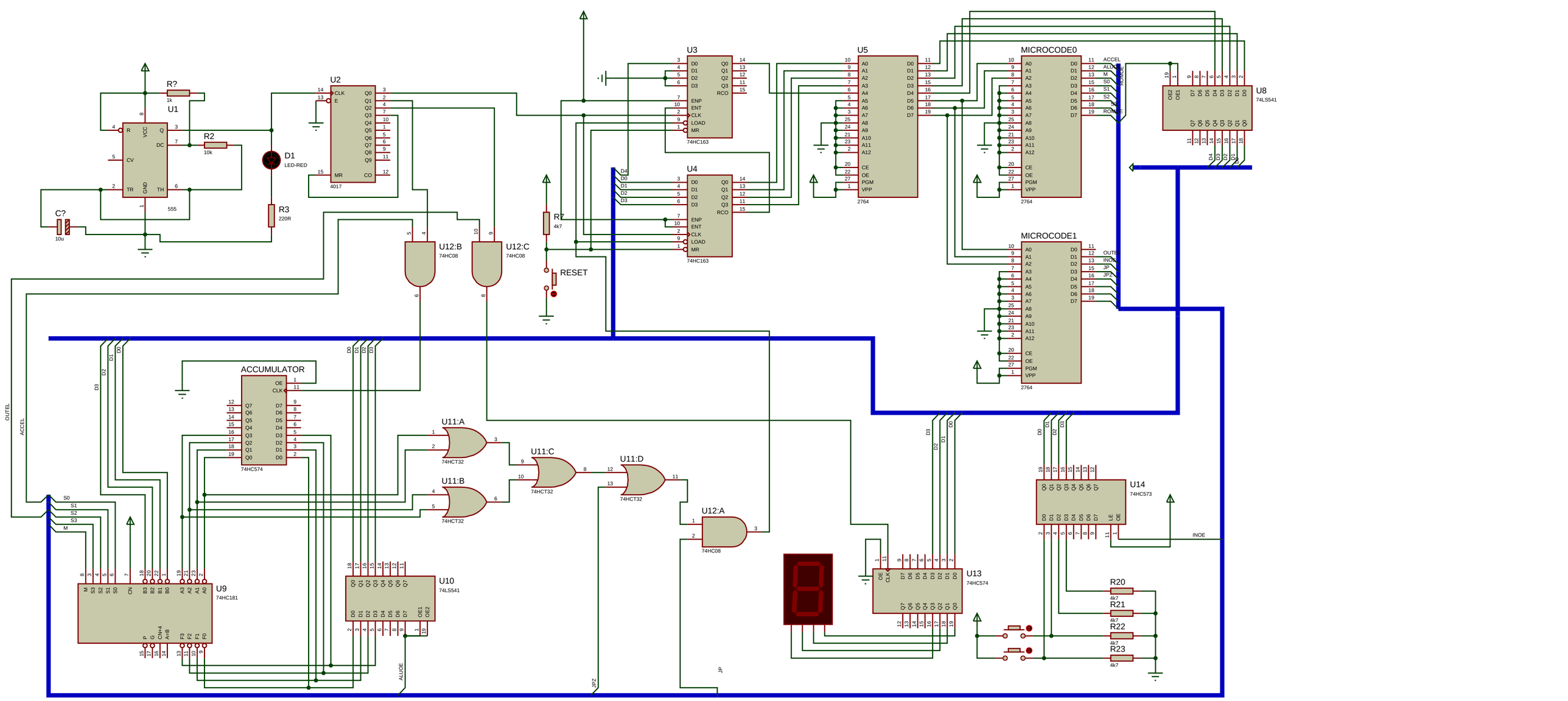
U1
555
R?
1k
R2
10k
C?
10u
D1
LED-RED
R3
220R
U2
4017
U3
74HC163
U4
74HC163
U5
2764
MICROCODE0
2764
MICROCODE1
2764
U8
74LS541
R7
4k7
RESET
U12:B
74HC08
U12:C
74HC08
ACCUMULATOR
74HC574
U11:A
74HCT32
U11:B
74HCT32
U11:C
74HCT32
U11:D
74HCT32
U12:A
74HC08
U9
74HC181
U10
74LS541
U14
74HC573
U13
74HC574
R20
4k7
R21
4k7
R22
4k7
R23
4k7
ACCEL
OUTEL
ALUOE
JPZ
JP
INOE