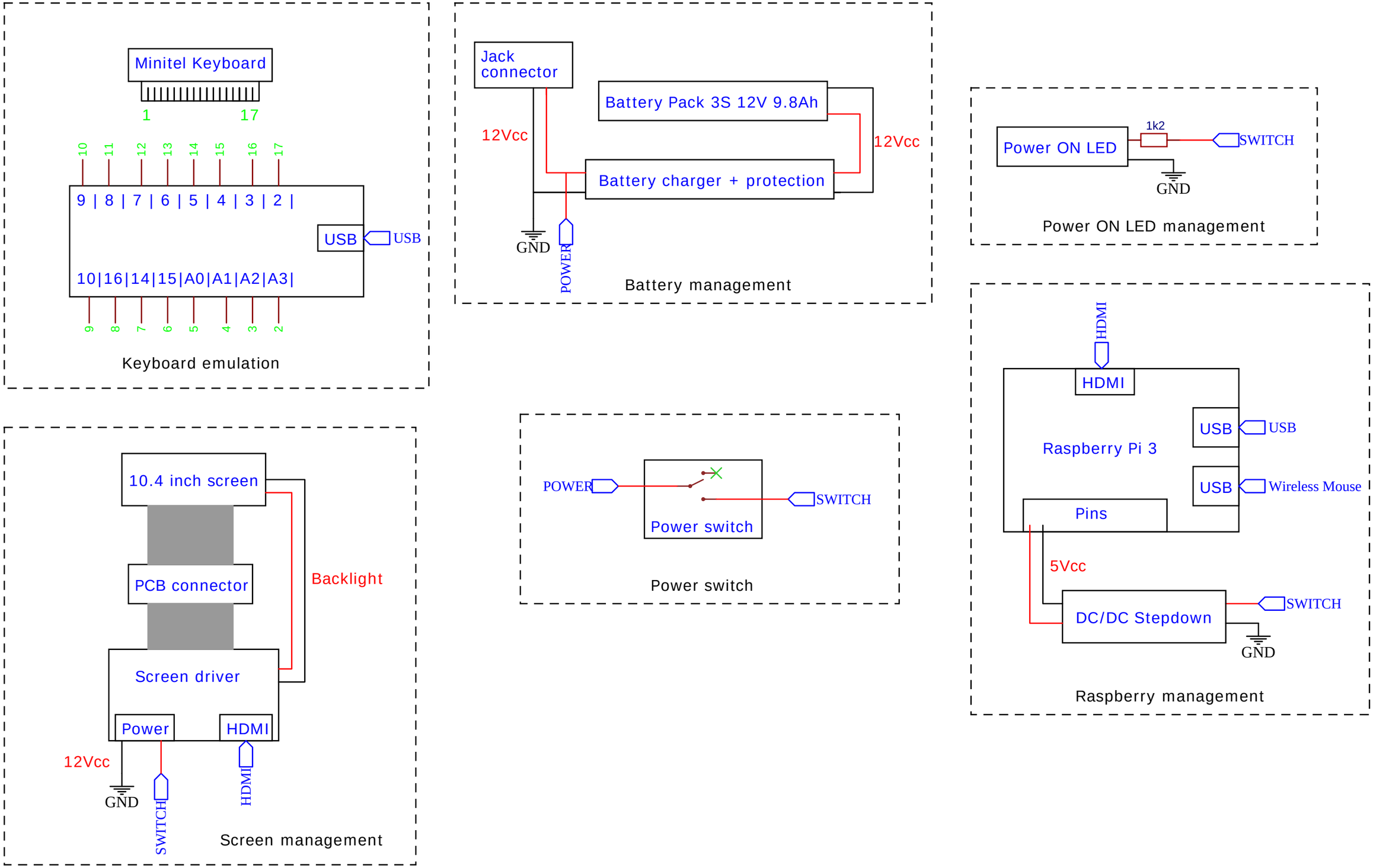

TITLE: Minitel wiring diagram	REV: 1.0
EasyEDA Company:	Sheet: 1/1
Date: 2021-09-29 Drawn By: Gautchh	