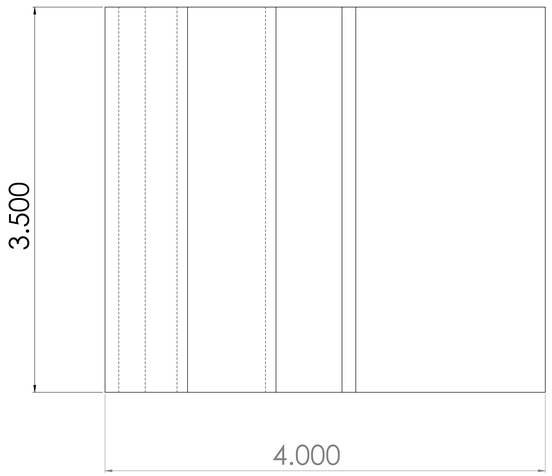


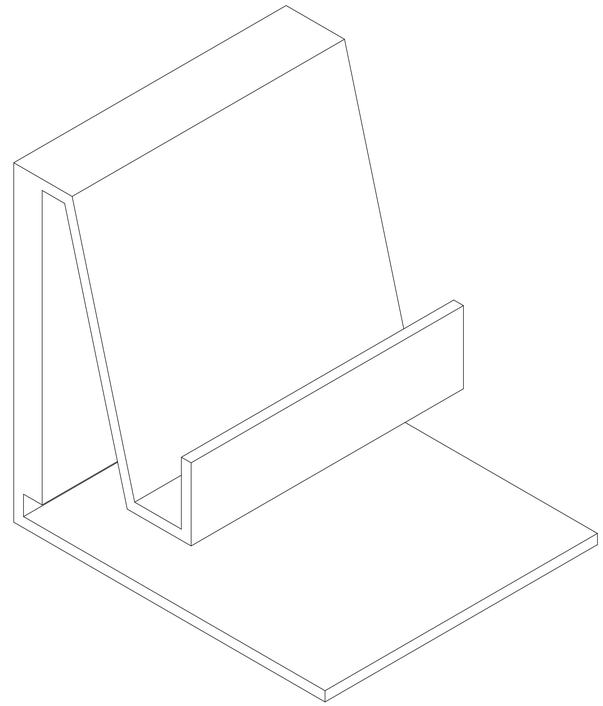

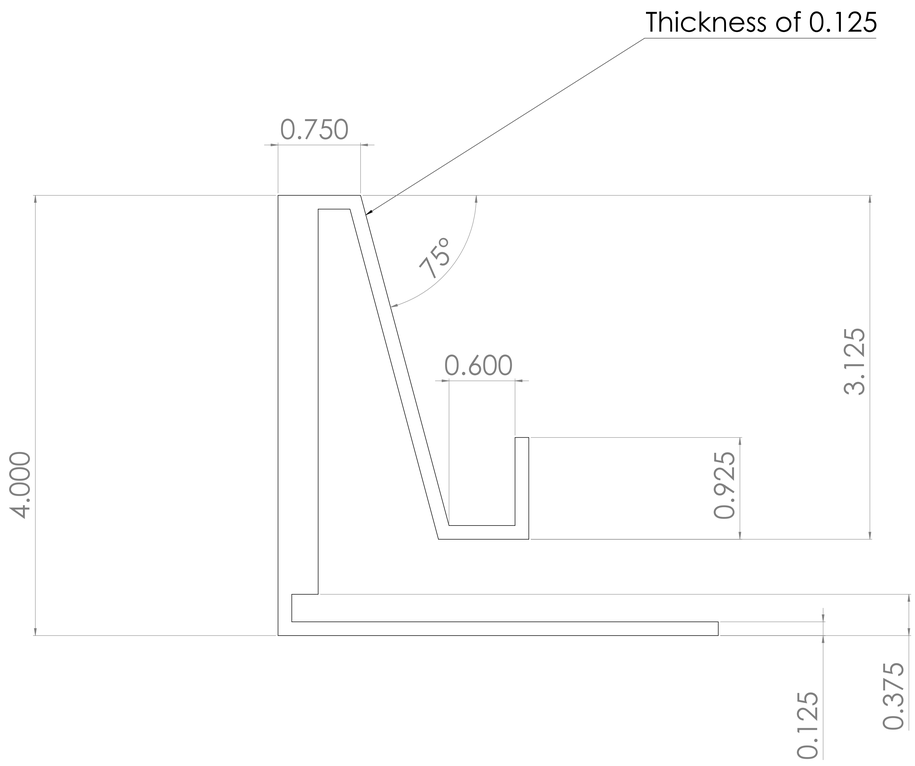


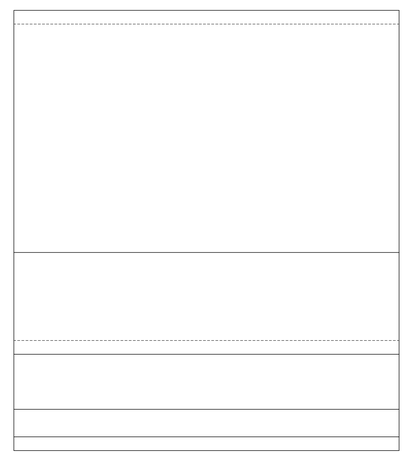

| | | | | | |
|---|---|---|---|---|---|
| UNLESS OTHERWISE SPECIFIED: DIMENSIONS ARE IN MILLIMETERS SURFACE FINISH: TOLERANCES: LINEAR: ANGULAR: | FINISH: | | DEBURR AND BREAK SHARP EDGES | DO NOT SCALE DRAWING | REVISION |
| | NAME | SIGNATURE | DATE | TITLE: | |
| DRAWN | | | | | |
| CHK'D | | | | | |
| APPV'D | | | | | |
| MFG | | | | | |
| Q.A. | | | MATERIAL: | DWG NO. Phone Holder | A0 |
| | | | WEIGHT: | SCALE:2:1 | SHEET 1 OF 1 |