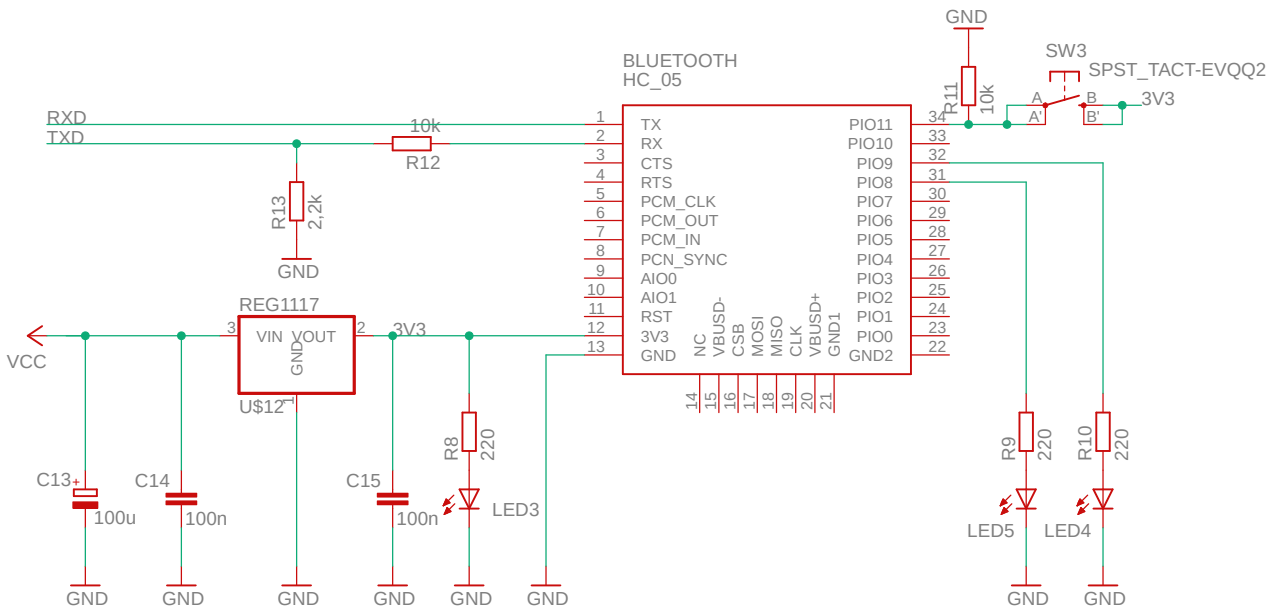

Midas Van Dorpe	
RUMI_LineFolower	
04/01/2019 15:50	
Sheet: 3/5	