WS2812 5050 LED

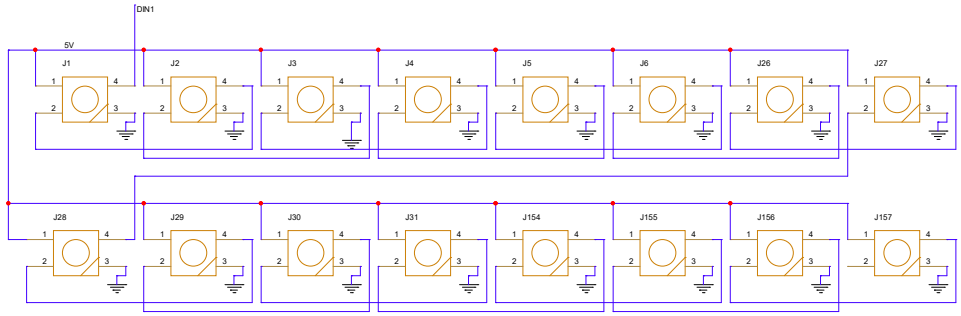

XIAO ESP32 C3

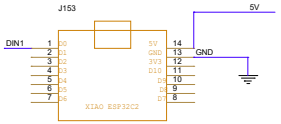

IP5303 BOOST MODULE

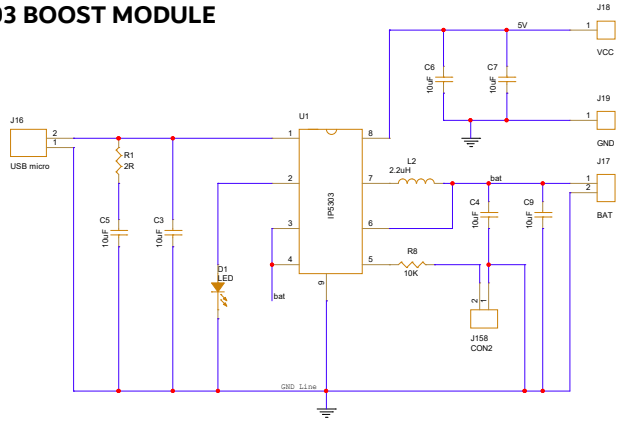

Title	HAPPY WEEK INDICATOR MAIN CIRCUIT	
Size A2	Document Number <Doc>	Rev 01
Date: Monday, November 18, 2024	Sheet 1 of 1	