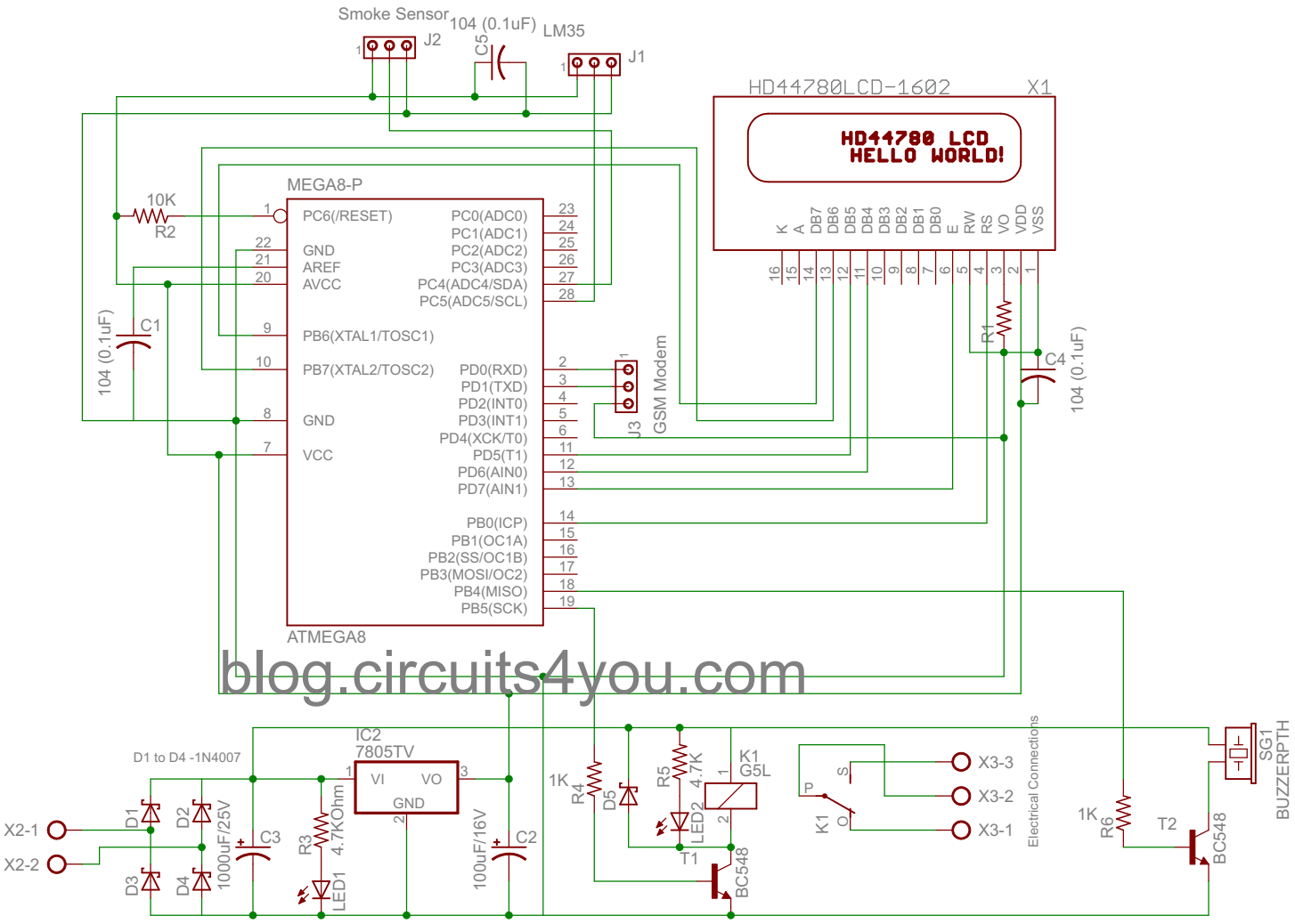
Smoke Sensor
J2
104 (0.1uF)
C5
LM35
J1
HD44780LCD-1602
X1
HD44780 LCD
HELLO WORLD!
MEGA8-P
10K
R2
PC6(/RESET)
GND
AREF
AVCC
PB6(XTAL1/TOSC1)
PB7(XTAL2/TOSC2)
GND
VCC
PC0(ADC0)
PC1(ADC1)
PC2(ADC2)
PC3(ADC3)
PC4(ADC4/SDA)
PC5(ADC5/SCL)
PD0(RXD)
PD1(TXD)
PD2(INT0)
PD3(INT1)
PD4(XCK/T0)
PD5(T1)
PD6(AIN0)
PD7(AIN1)
PB0(ICP)
PB1(OC1A)
PB2(SS/OC1B)
PB3(MOSI/OC2)
PB4(MISO)
PB5(SCK)
ATMEGA8
104 (0.1uF)
C1
J3
GSM Modem
R1
C4
104 (0.1uF)
K
A
DB7
DB6
DB5
DB4
DB3
DB2
DB1
DB0
E
RW
RS
VO
VDD
VSS
blog.circuits4you.com
D1 to D4 -1N4007
IC2
7805TV
VI
VO
GND
X2-1
X2-2
D1
D2
D3
D4
1000uF/25V
C3
R3
4.7KOhm
LED1
100uF/16V
C2
1K
R4
D5
R5
4.7K
LED2
T1
BC548
K1
G5L
K1
P
S
O
X3-3
X3-2
X3-1
Electrical Connections
1K
R6
T2
BC548
SG1
BUZZERPTH