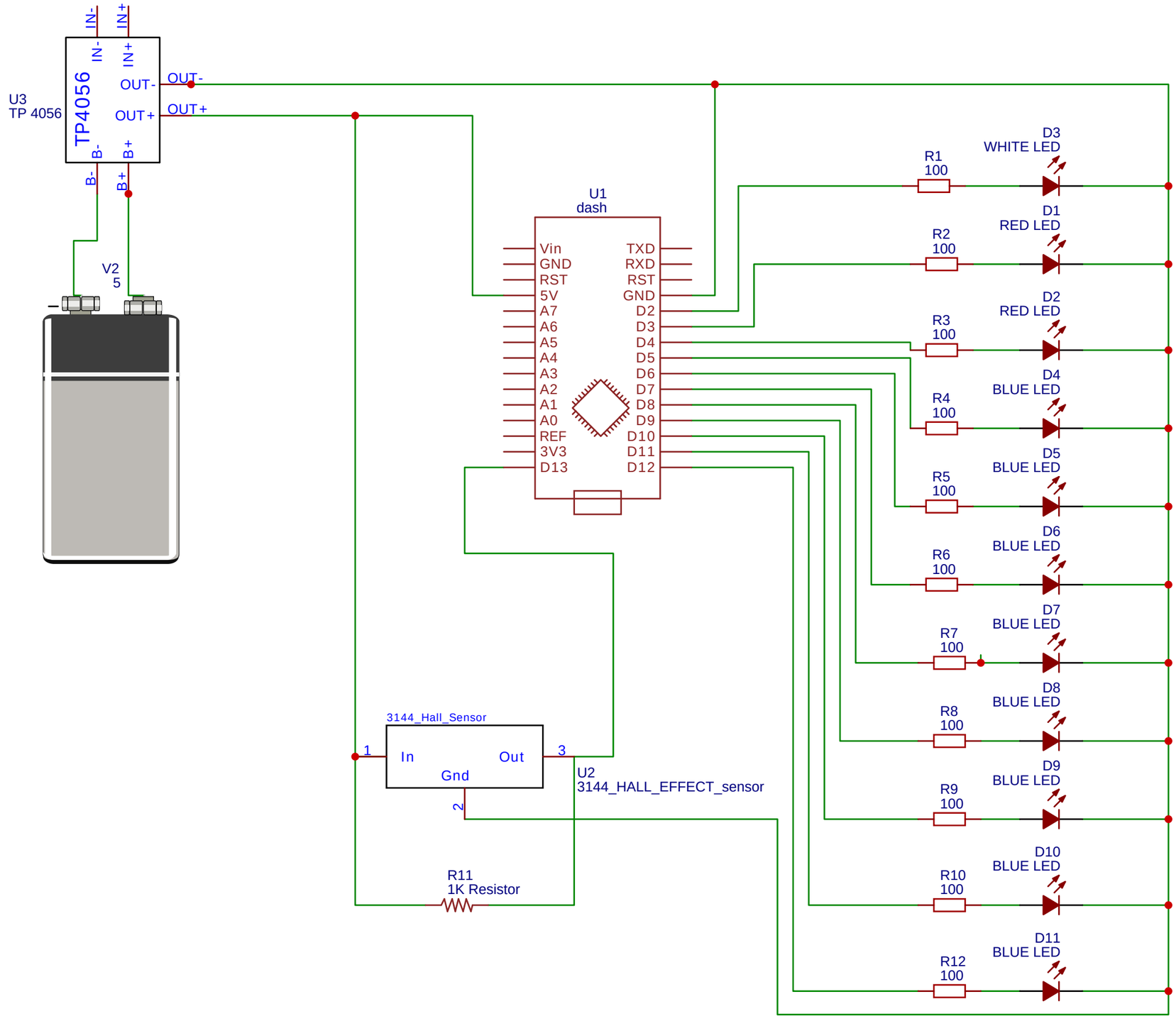

TITLE: POV		REV: 1.0
EasyEDA	Company: Your Company	Sheet: 1/1
	Date: 2020-06-06 Drawn By: raxathor	