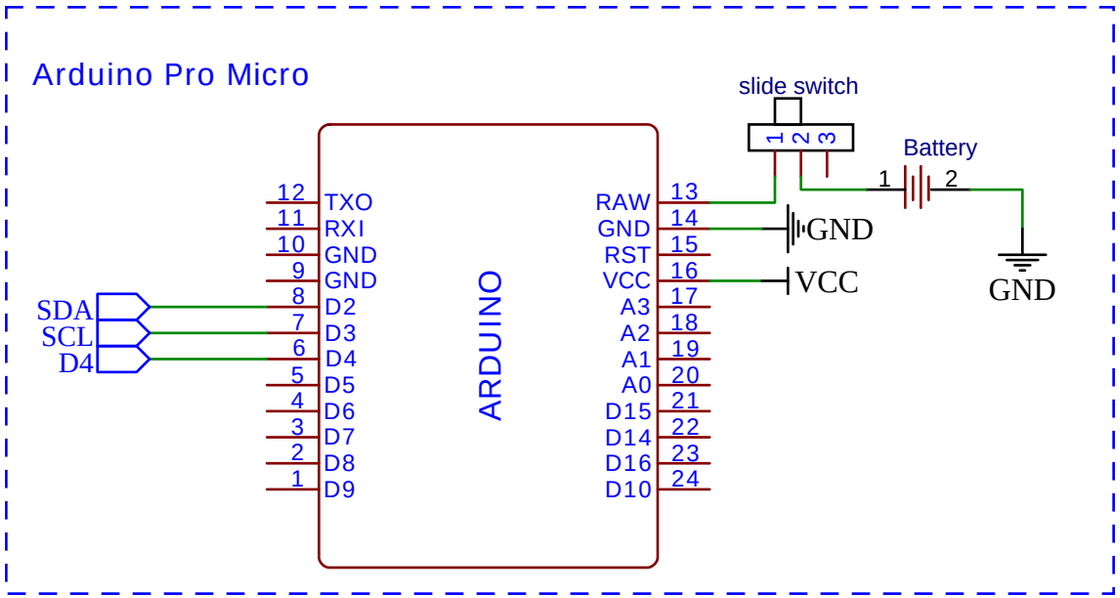

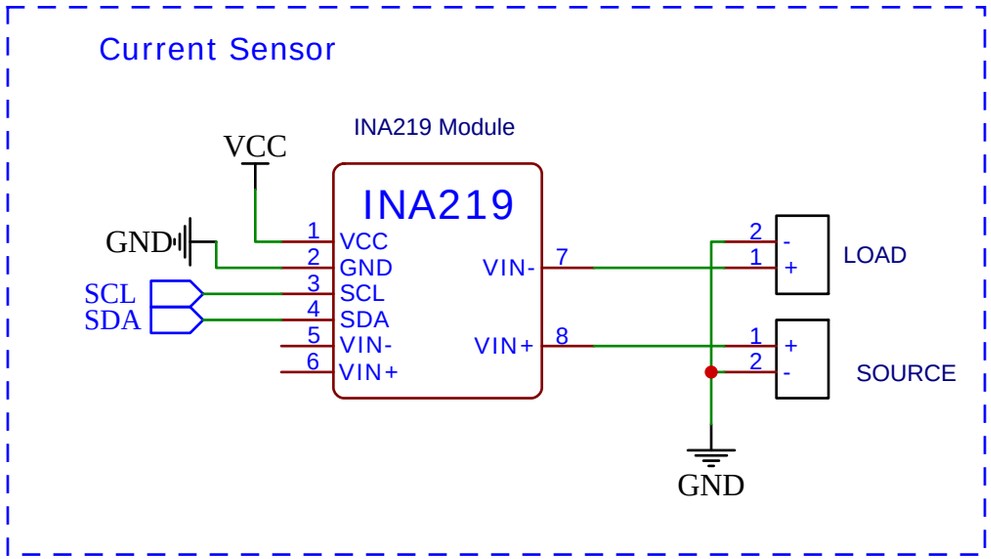

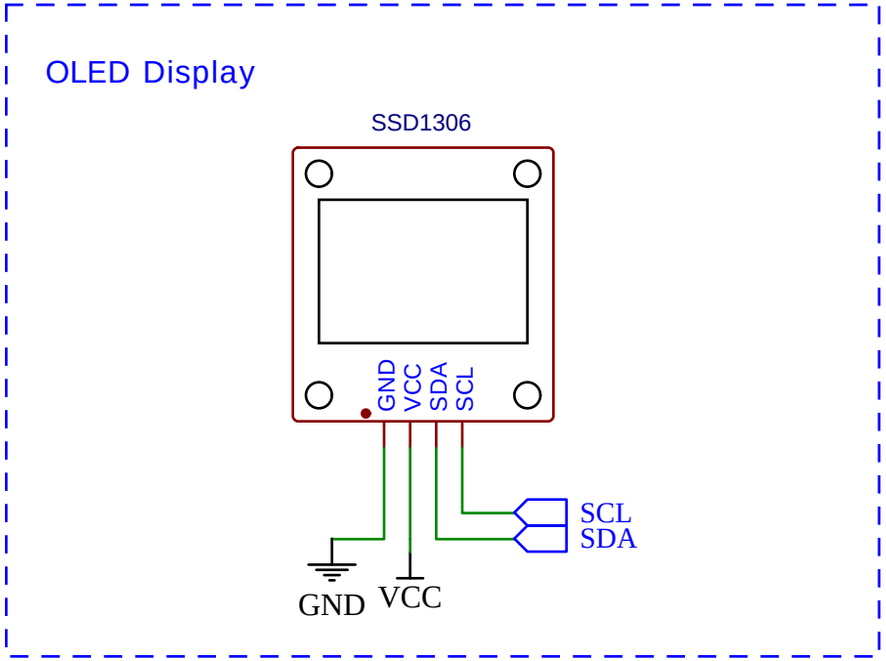

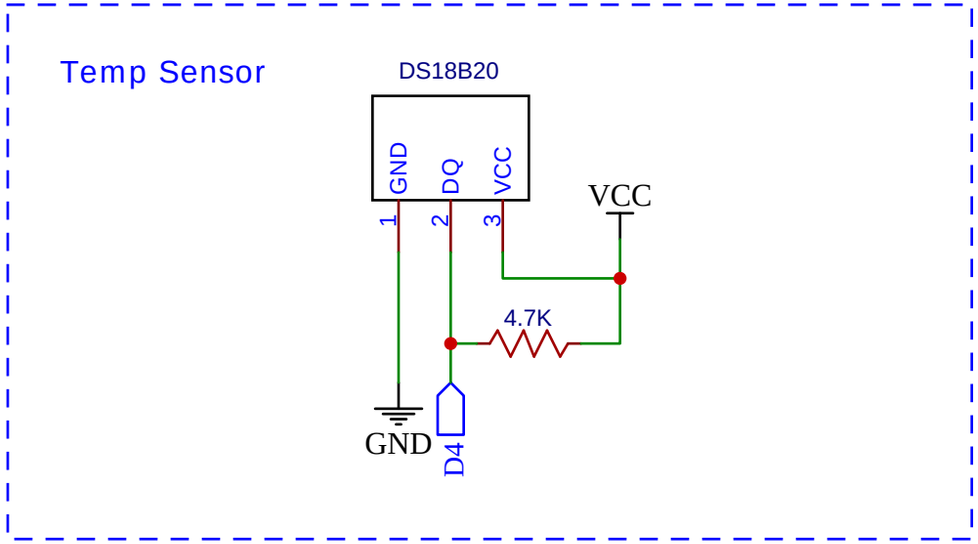

TITLE: DIY Arduino Multifunction Energy Meter V1.0		REV: 1.0
Open Green Energy	Company: Open Green Energy	Sheet: 1/1
	Date: 2020-06-08 Drawn By: Debasish Dutta	