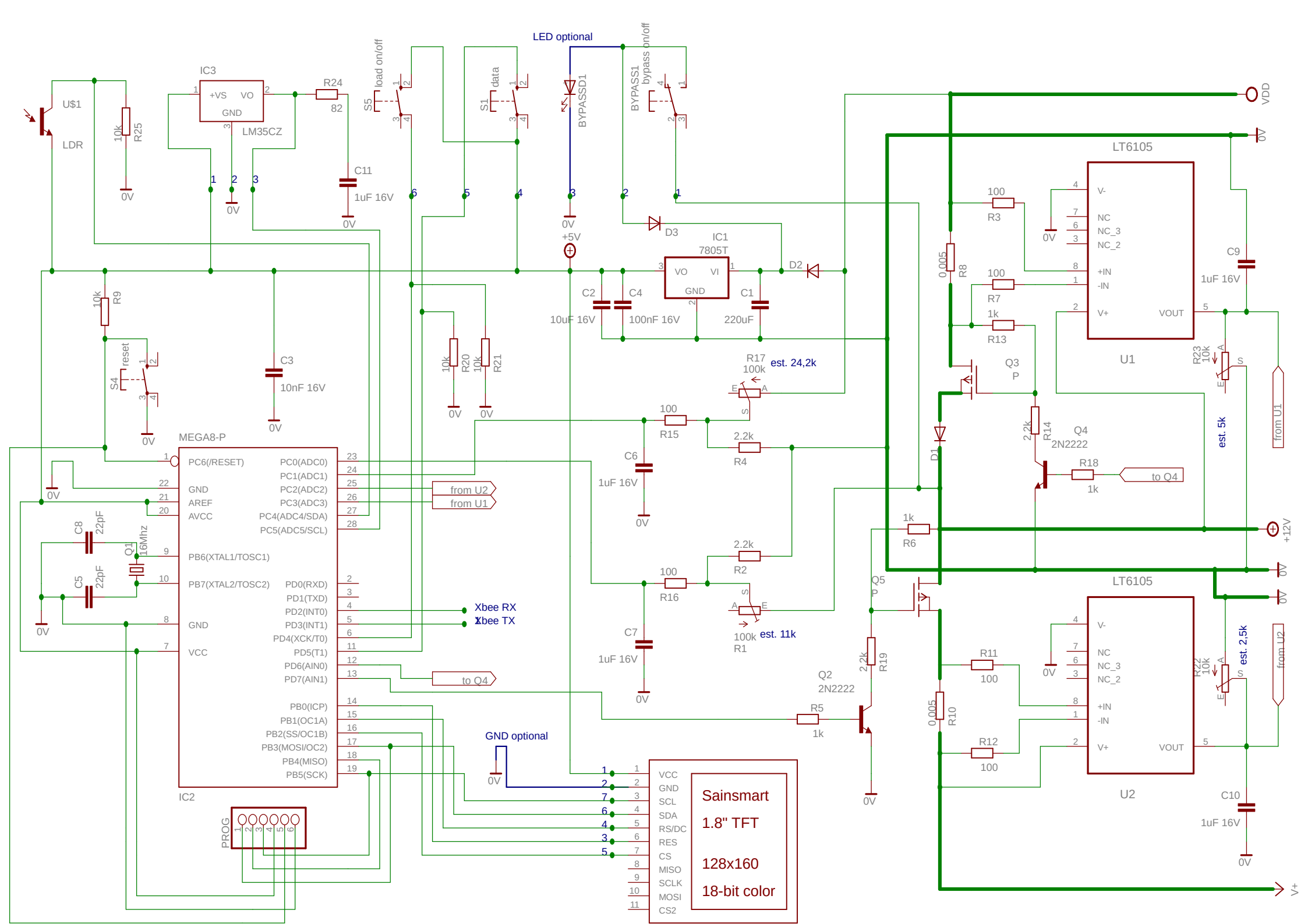
LED optional
IC3
+VS
VO
GND
LM35CZ
R24
82
C11
1uF 16V
U$1
LDR
10k
R25
0V
load on/off
S5
data
S1
BYPASSD1
BYPASS1
bypass on/off
D3
+5V
IC1
7805T
VO
VI
GND
C2
10uF 16V
C4
100nF 16V
C1
220uF
D2
VDD
LT6105
V-
NC
NC_3
NC_2
+IN
-IN
V+
VOUT
U1
C9
1uF 16V
R3
100
R7
100
R13
1k
R8
0.005
Q3
P
R14
2.2k
Q4
2N2222
R18
1k
to Q4
R23
10k
est. 5k
from U1
+12V
R6
1k
Q5
P
R19
2.2k
Q2
2N2222
R5
1k
R11
100
R12
100
R10
0.005
U2
C10
1uF 16V
R22
10k
est. 2,5k
from U2
V+
R9
10k
reset
S4
C3
10nF 16V
R20
10k
R21
10k
R17
100k
est. 24,2k
R15
100
R4
2.2k
C6
1uF 16V
R2
2.2k
R16
100
R1
100k
est. 11k
C7
1uF 16V
MEGA8-P
PC6(/RESET)
GND
AREF
AVCC
PB6(XTAL1/TOSC1)
PB7(XTAL2/TOSC2)
GND
VCC
PC0(ADC0)
PC1(ADC1)
PC2(ADC2)
PC3(ADC3)
PC4(ADC4/SDA)
PC5(ADC5/SCL)
PD0(RXD)
PD1(TXD)
PD2(INT0)
PD3(INT1)
PD4(XCK/T0)
PD5(T1)
PD6(AIN0)
PD7(AIN1)
PB0(ICP)
PB1(OC1A)
PB2(SS/OC1B)
PB3(MOSI/OC2)
PB4(MISO)
PB5(SCK)
IC2
C8
22pF
C5
22pF
Q1
16Mhz
from U2
from U1
Xbee RX
Xbee TX
to Q4
GND optional
PROG
VCC
GND
SCL
SDA
RS/DC
RES
CS
MISO
SCLK
MOSI
CS2
Sainsmart
1.8" TFT
128x160
18-bit color