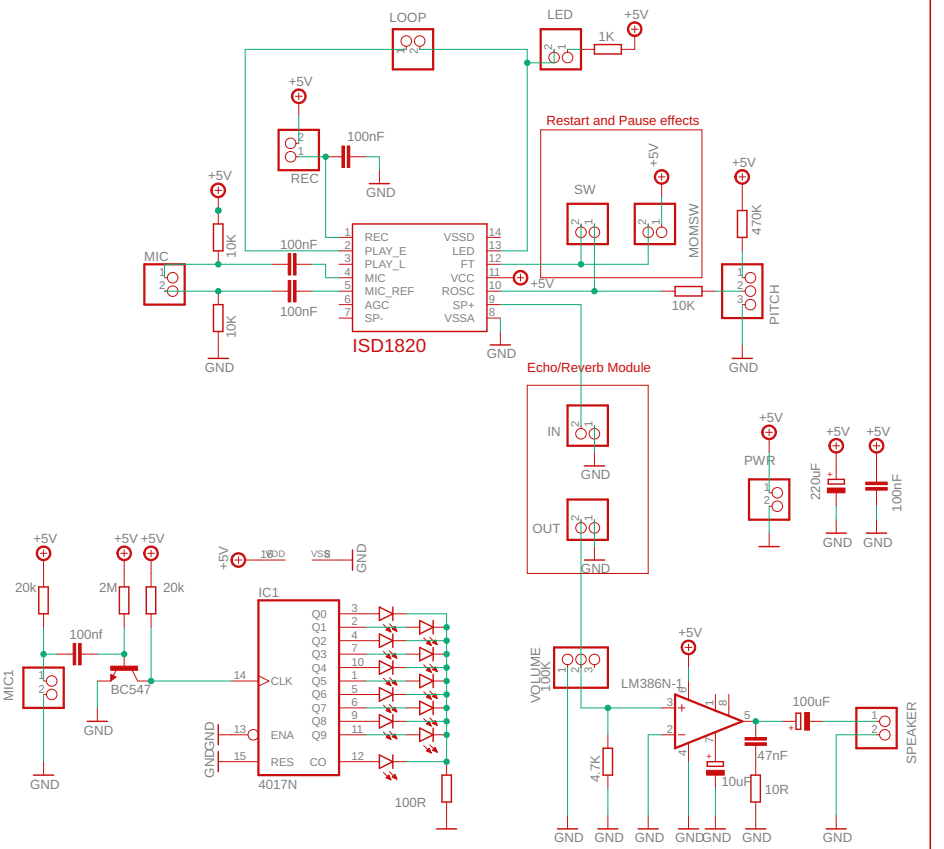

TITLE: Sound bender	
Document Number:	REV:
Date: 5/02/2021 8:22 PM	Sheet: 1/1