1

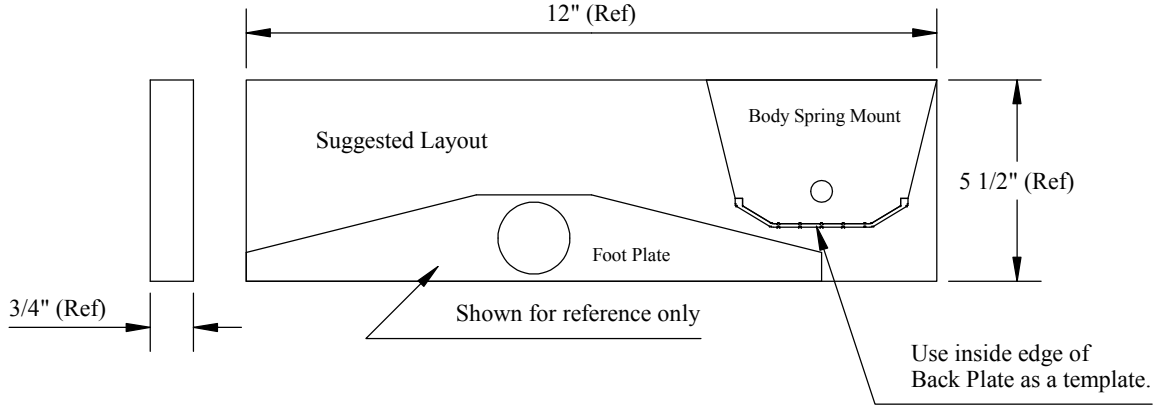

2

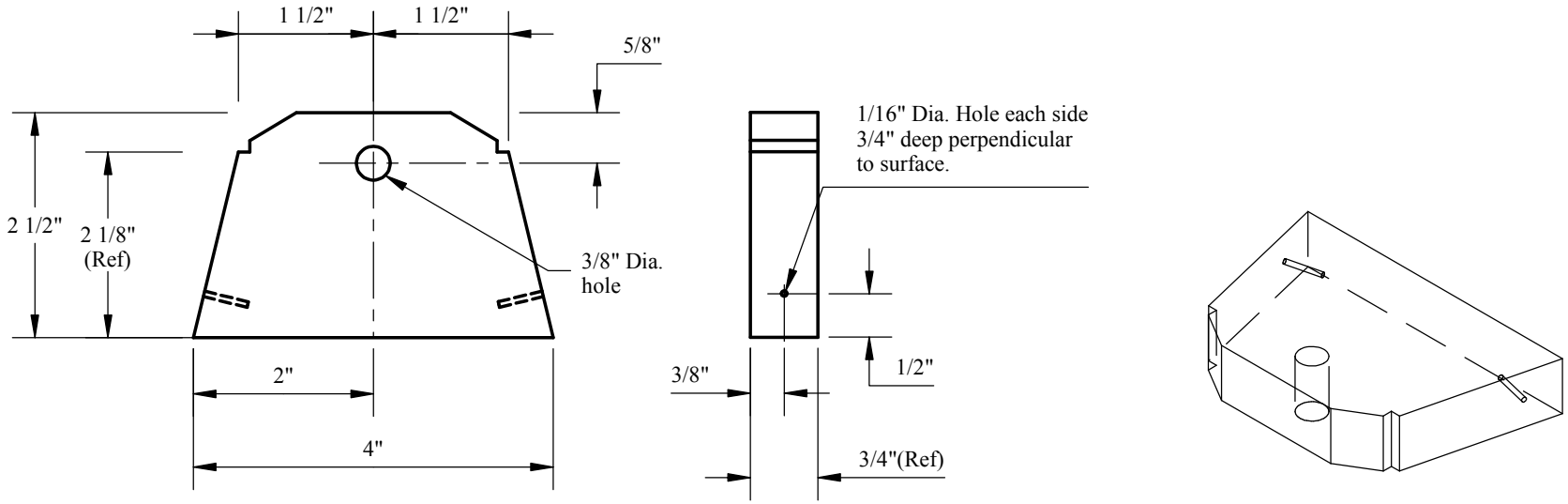

Spring Body Mount Detail

Material: 3/4" x 5 1/2" x 12" Pine Board (Same board used for Foot Plate)