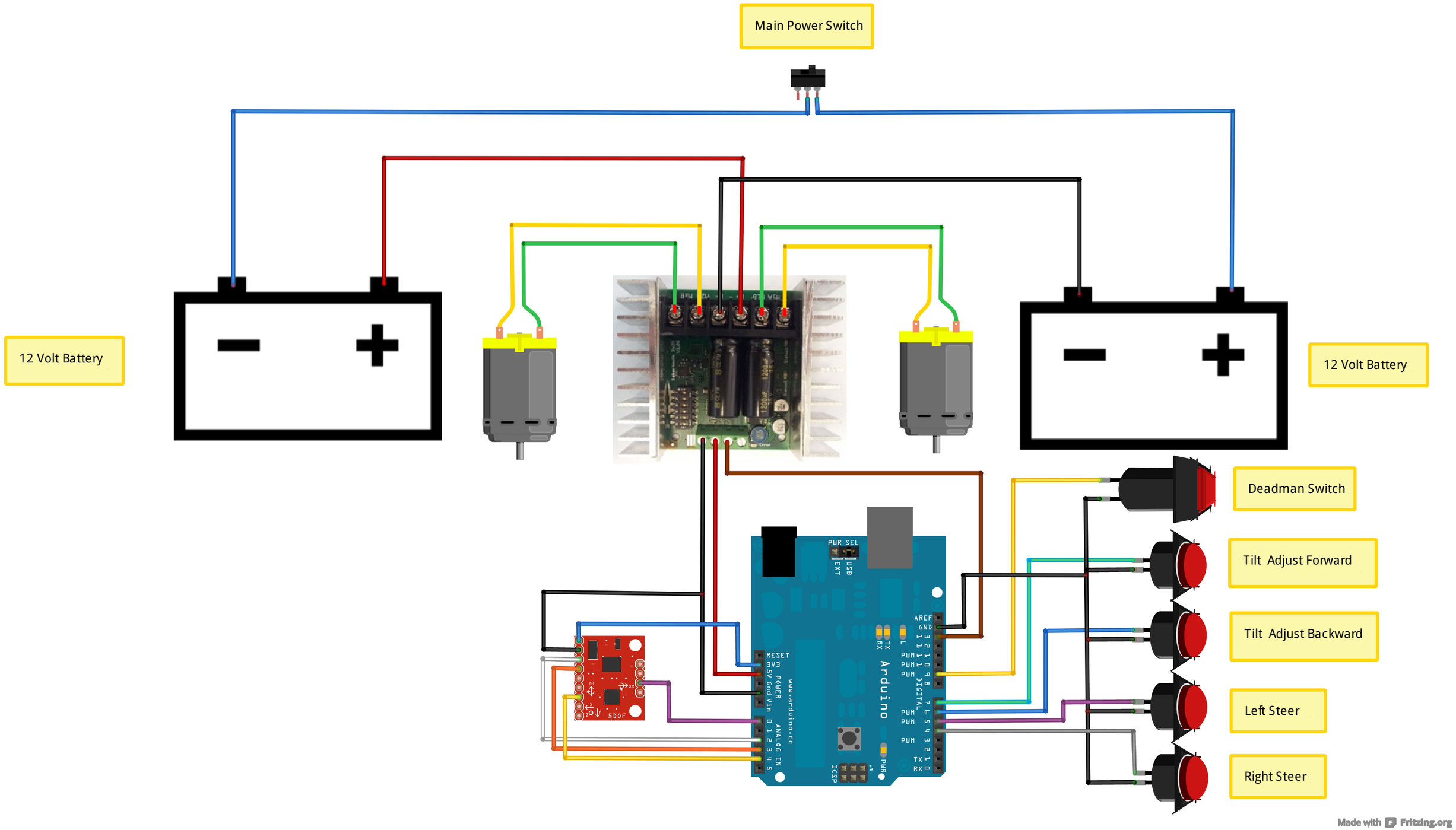
Main Power Switch
12 Volt Battery
12 Volt Battery
Deadman Switch
Tilt Adjust Forward
Tilt Adjust Backward
Left Steer
Right Steer
Arduino
5DOF
Made with Fritzing.org