HISTORY		
REVISION	DESCRIPTION	DATE
0.1	First Edition	20/05/20
0.2	Lengthened 10mm	11/06/20

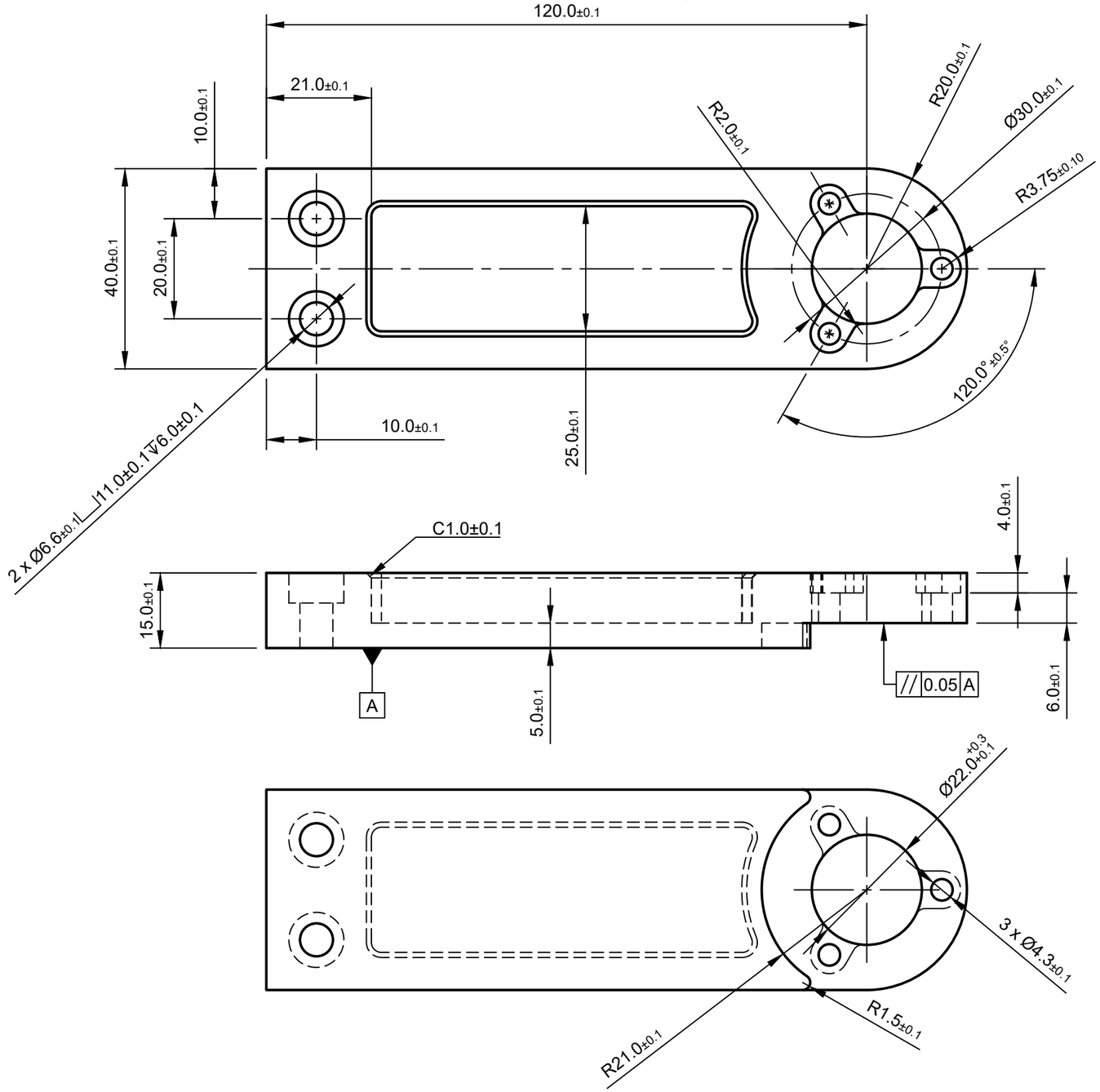

MATERIAL:6061
FINISH:NATURAL
COLOUR:NATURAL

NOTE: Any dimension not explicitly called-out should be ±0.1 of true form.

Dept.	Technical reference	Created by	Approved by
ENG	TAPPER	GLH 15/05/2020	
		Document type: PRODUCTION	Document status: RELEASED
		SKU: T-ARM	Description: Tapper Arm
			Rev. 0.2 / Date of issue 11/06/20 / Sheet 1/1