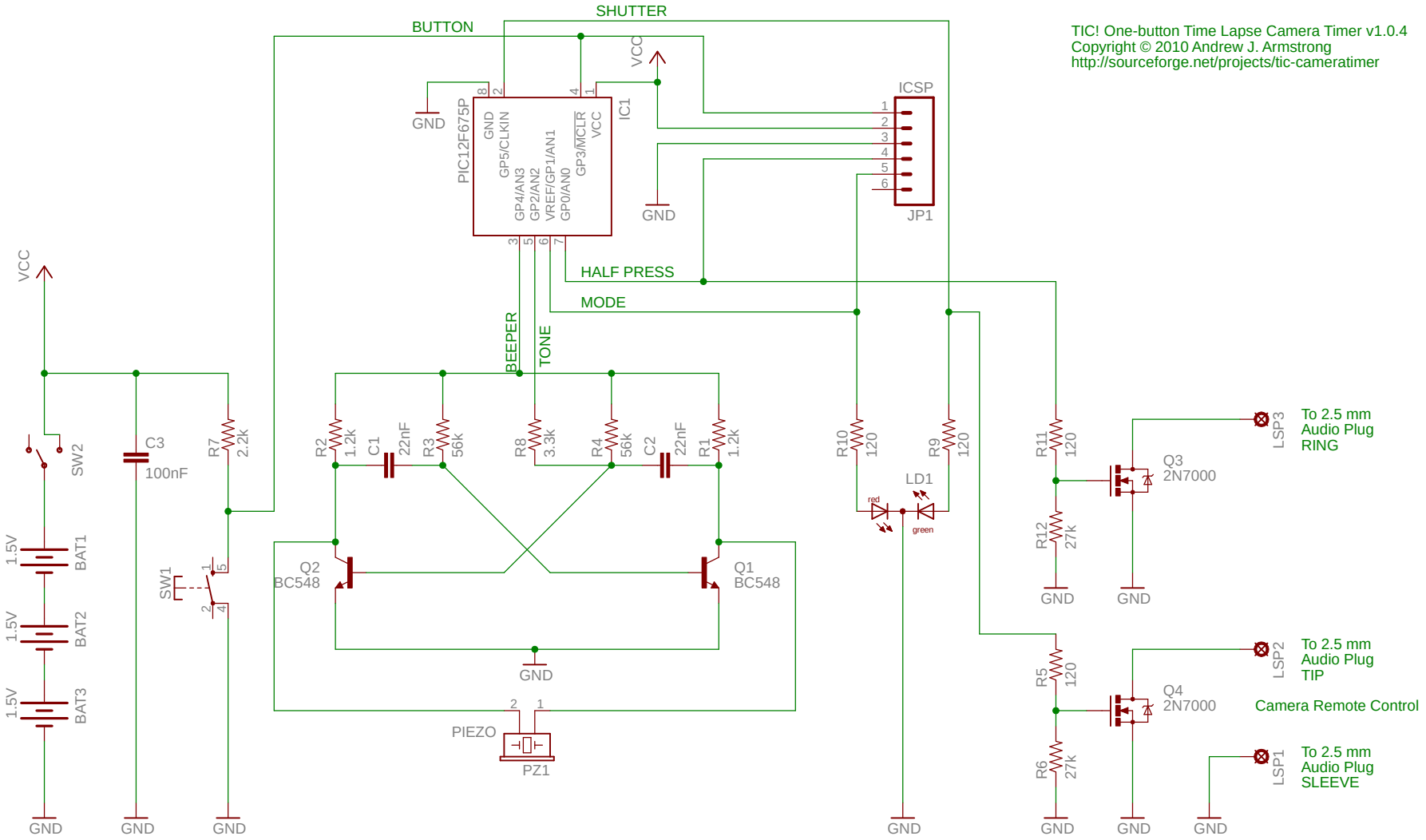
TIC! One-button Time Lapse Camera Timer v1.0.4
Copyright © 2010 Andrew J. Armstrong
http://sourceforge.net/projects/tic-cameratimer
SHUTTER
BUTTON
VCC
GND
PIC12F675P
GND
GP5/CLKIN
GP4/AN3
GP2/AN2
VREF/GP1/AN1
GP0/AN0
GP3/MCLR
VCC
IC1
ICSP
JP1
HALF PRESS
MODE
BEEPER
TONE
R2 1.2k
C1 22nF
R3 56k
R8 3.3k
R4 56k
C2 22nF
R1 1.2k
Q2 BC548
Q1 BC548
PIEZO
PZ1
R10 120
R9 120
LD1
red
green
R11 120
R12 27k
Q3 2N7000
LSP3
To 2.5 mm Audio Plug RING
R5 120
R6 27k
Q4 2N7000
LSP2
To 2.5 mm Audio Plug TIP
Camera Remote Control
LSP1
To 2.5 mm Audio Plug SLEEVE
SW2
C3 100nF
R7 2.2k
SW1
1.5V BAT1
1.5V BAT2
1.5V BAT3