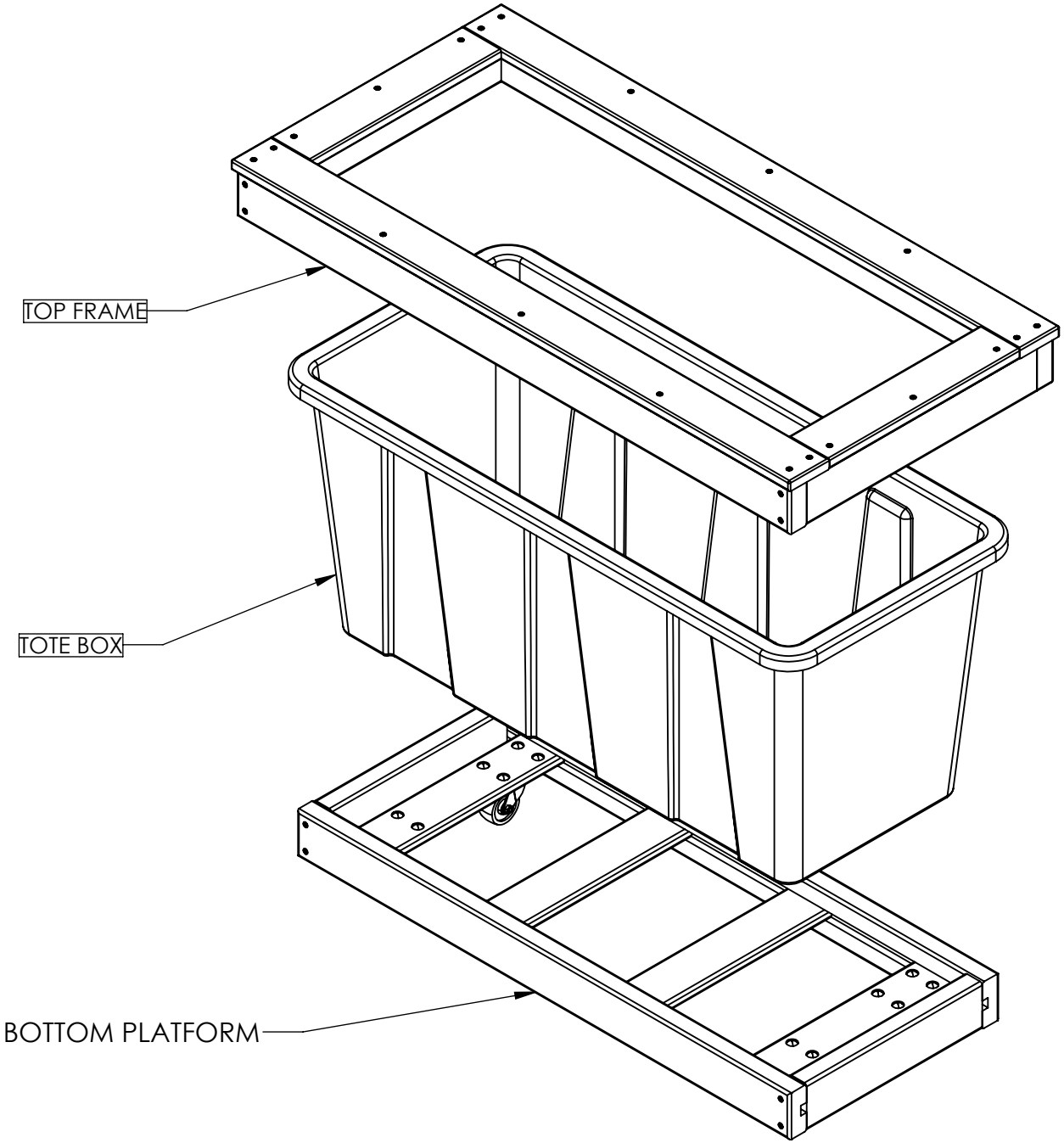
TOP FRAME
TOTE BOX
BOTTOM PLATFORM

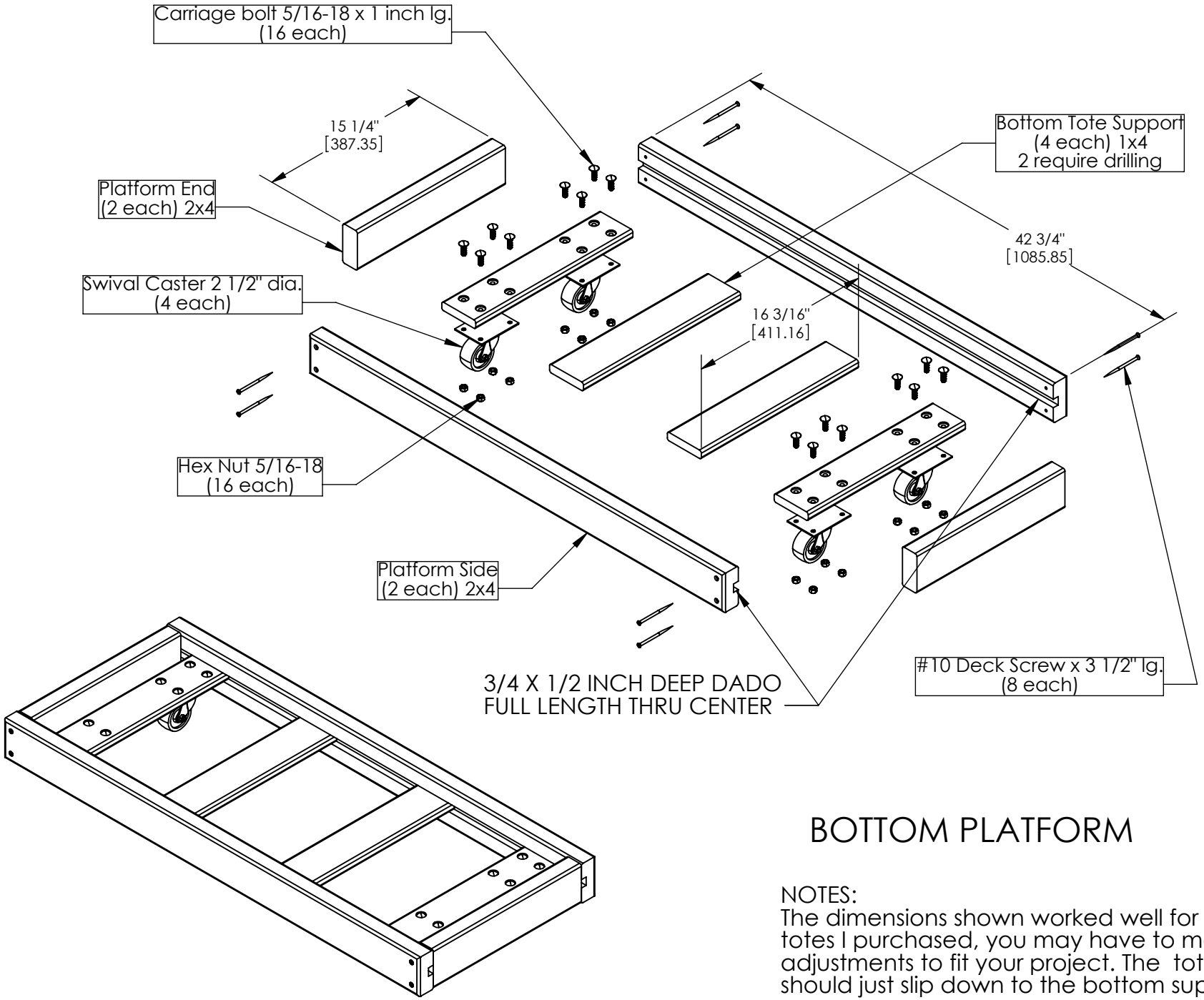

BOTTOM PLATFORM

NOTES:
The dimensions shown worked well for the totes I purchased, you may have to make adjustments to fit your project. The tote should just slip down to the bottom supports.

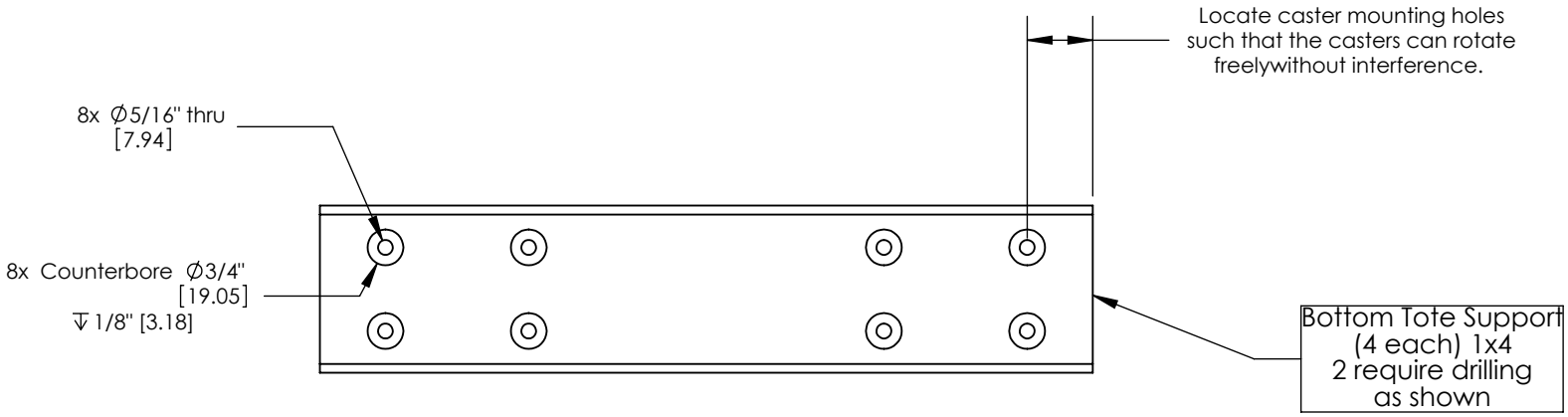
Locate caster mounting holes
such that the casters can rotate
freelywithout interference.
8x ∅5/16" thru
[7.94]
8x Counterbore ∅3/4"
[19.05]
↧ 1/8" [3.18]
Bottom Tote Support
(4 each) 1x4
2 require drilling
as shown

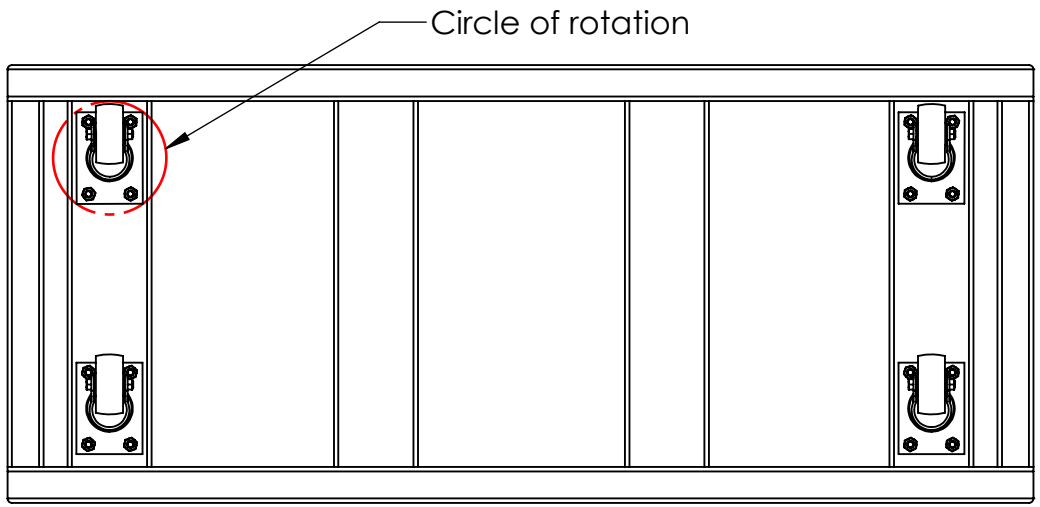
Circle of rotation

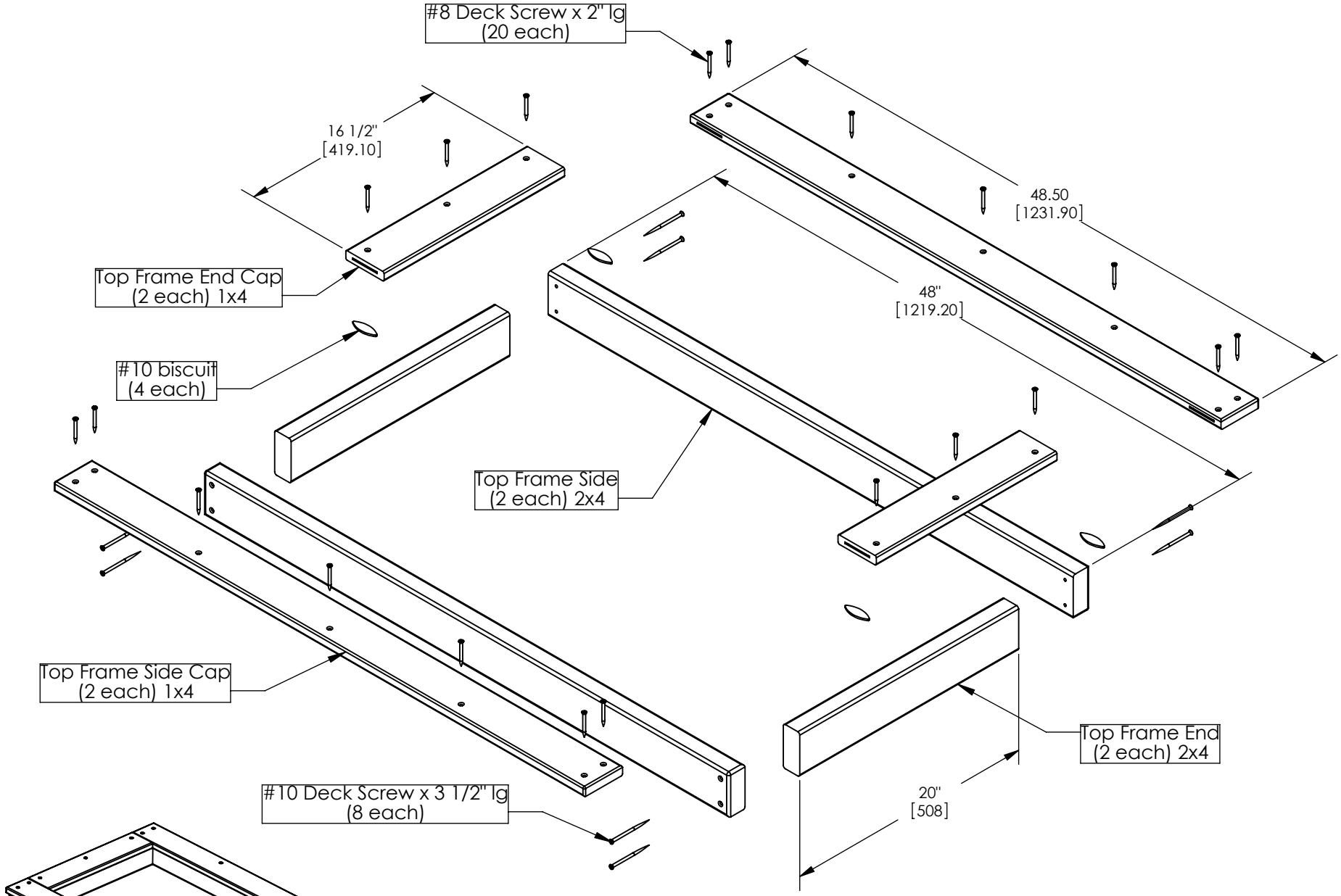

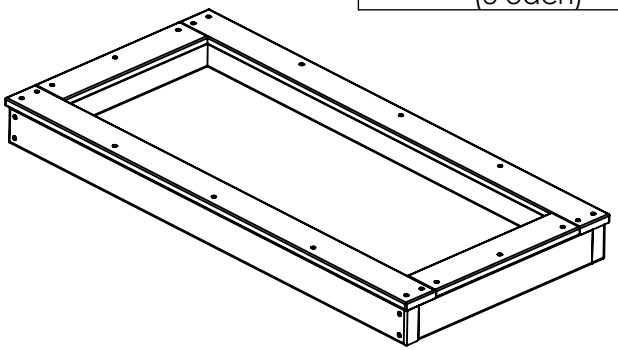

TOP FRAME

NOTES:
The dimensions shown worked well for the totes I purchased, you may have to make adjustments to fit your project. The primary purpose of the frame is to limit the side bulge created by the pressure of the soil. It should just slip over the totes rim.