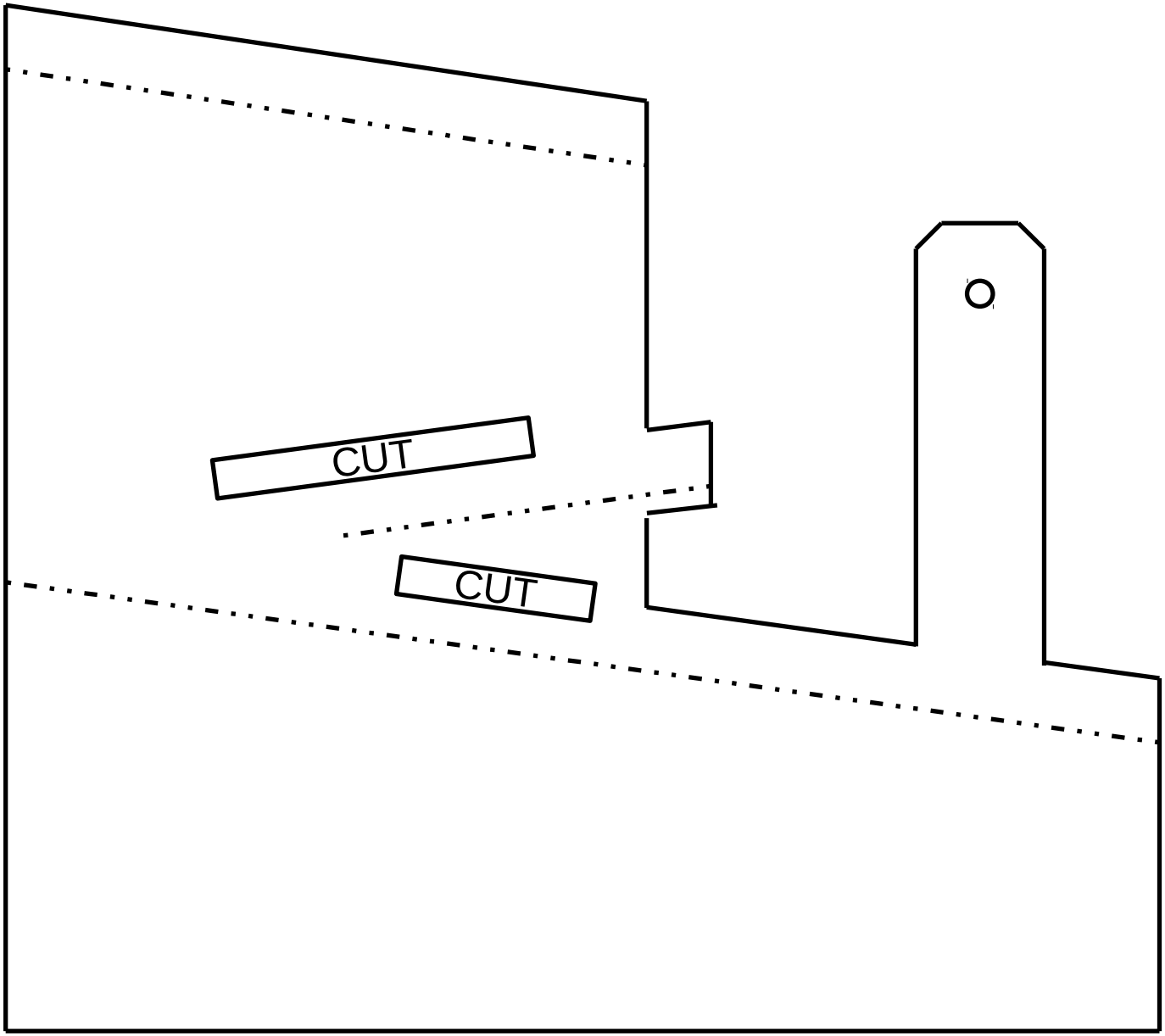
CUT
CUT

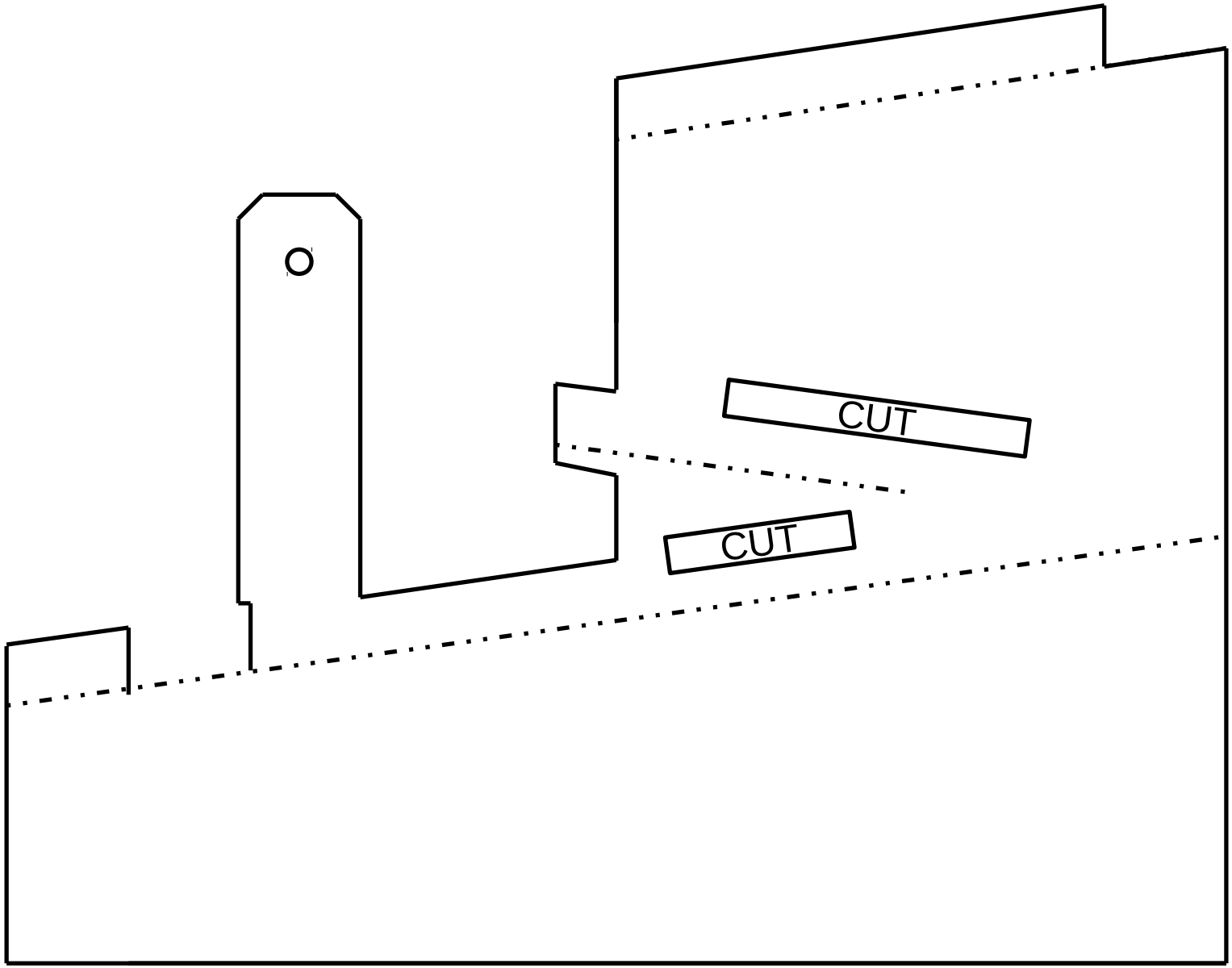
CUT
CUT