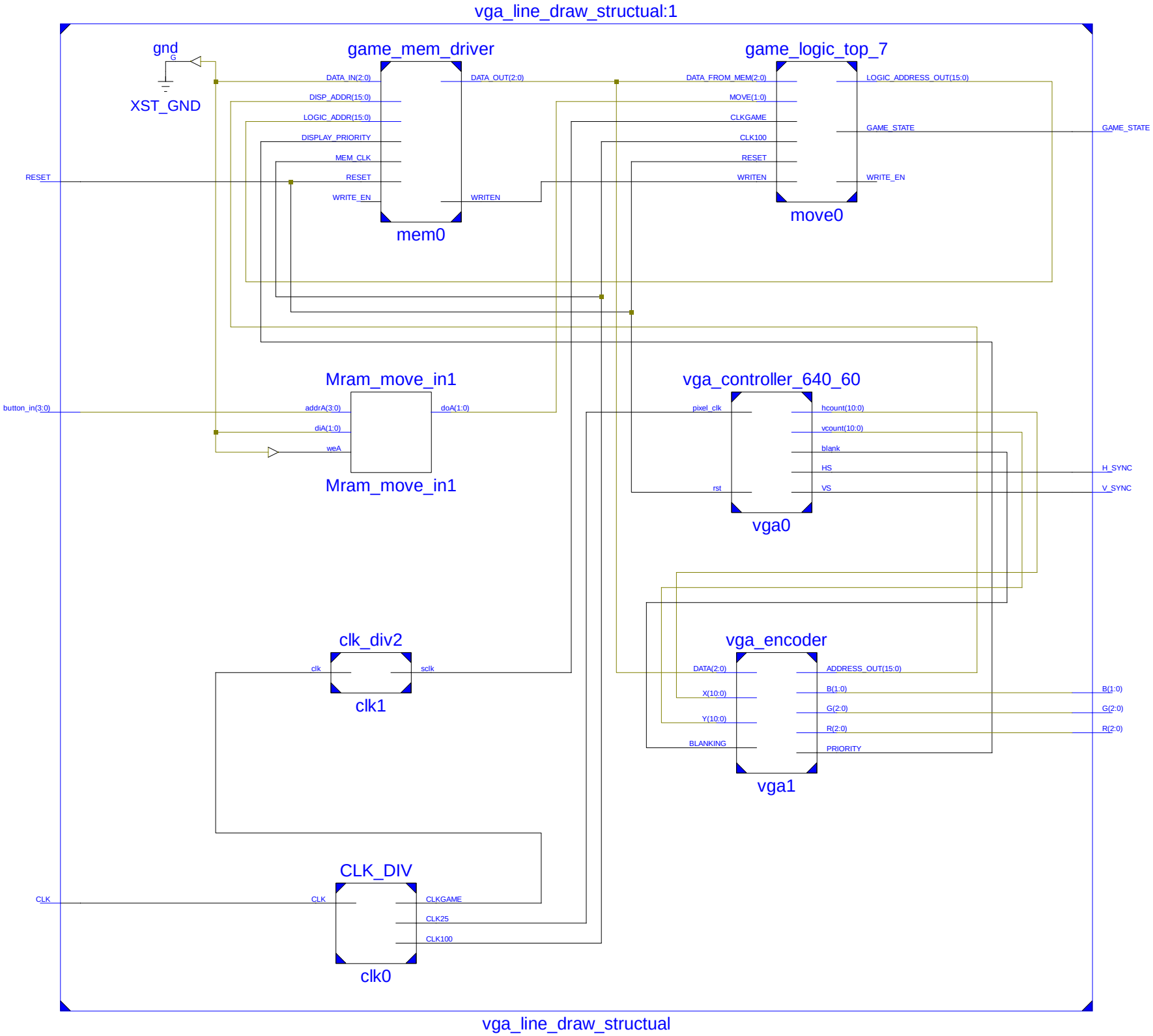
vga_line_draw_structual:1
gnd
G
XST_GND
game_mem_driver
DATA_IN(2:0)
DISP_ADDR(15:0)
LOGIC_ADDR(15:0)
DISPLAY_PRIORITY
MEM_CLK
RESET
WRITE_EN
DATA_OUT(2:0)
WRITEN
mem0
game_logic_top_7
DATA_FROM_MEM(2:0)
MOVE(1:0)
CLKGAME
CLK100
RESET
WRITEN
LOGIC_ADDRESS_OUT(15:0)
GAME_STATE
WRITE_EN
move0
GAME_STATE
RESET
Mram_move_in1
button_in(3:0)
addrA(3:0)
diA(1:0)
weA
doA(1:0)
Mram_move_in1
vga_controller_640_60
pixel_clk
rst
hcount(10:0)
vcount(10:0)
blank
HS
VS
H_SYNC
V_SYNC
vga0
clk_div2
clk
sclk
clk1
vga_encoder
DATA(2:0)
X(10:0)
Y(10:0)
BLANKING
ADDRESS_OUT(15:0)
B(1:0)
G(2:0)
R(2:0)
PRIORITY
B(1:0)
G(2:0)
R(2:0)
vga1
CLK_DIV
CLK
CLK
CLKGAME
CLK25
CLK100
clk0
vga_line_draw_structual