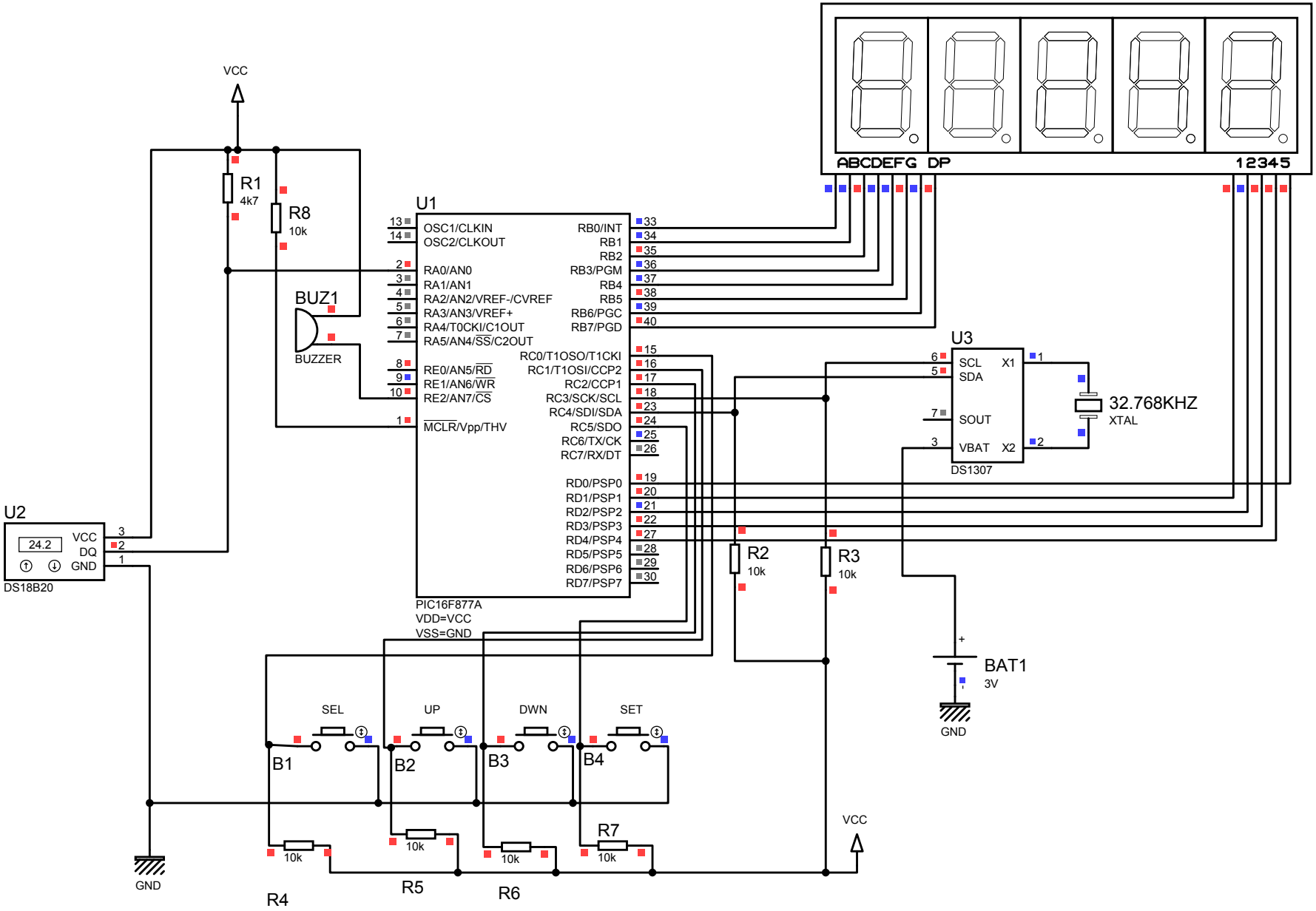
VCC
R1
4k7
R8
10k
BUZ1
BUZZER
U1
OSC1/CLKIN
OSC2/CLKOUT
RA0/AN0
RA1/AN1
RA2/AN2/VREF-/CVREF
RA3/AN3/VREF+
RA4/T0CKI/C1OUT
RA5/AN4/SS/C2OUT
RE0/AN5/RD
RE1/AN6/WR
RE2/AN7/CS
MCLR/Vpp/THV
RB0/INT
RB1
RB2
RB3/PGM
RB4
RB5
RB6/PGC
RB7/PGD
RC0/T1OSO/T1CKI
RC1/T1OSI/CCP2
RC2/CCP1
RC3/SCK/SCL
RC4/SDI/SDA
RC5/SDO
RC6/TX/CK
RC7/RX/DT
RD0/PSP0
RD1/PSP1
RD2/PSP2
RD3/PSP3
RD4/PSP4
RD5/PSP5
RD6/PSP6
RD7/PSP7
PIC16F877A
VDD=VCC
VSS=GND
ABCDEFG DP
12345
U3
SCL
SDA
SOUT
VBAT
X1
X2
DS1307
32.768KHZ
XTAL
U2
24.2
VCC
DQ
GND
DS18B20
R2
10k
R3
10k
BAT1
3V
GND
SEL
UP
DWN
SET
B1
B2
B3
B4
10k
R4
10k
R5
10k
R6
R7
10k
VCC
GND