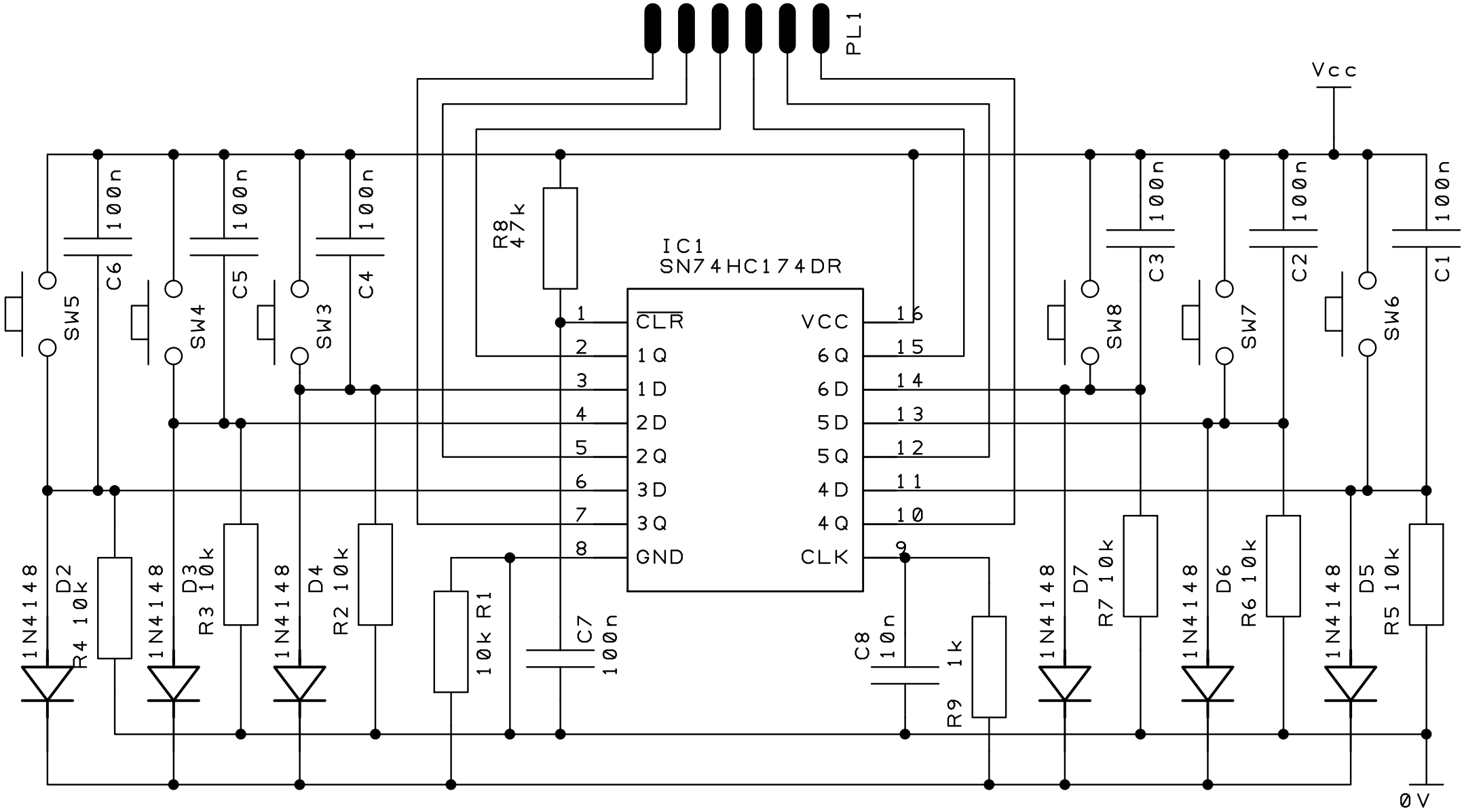
PL1
Vcc
0V
IC1
SN74HC174DR
CLR
1Q
1D
2D
2Q
3D
3Q
GND
VCC
6Q
6D
5D
5Q
4D
4Q
CLK
1
2
3
4
5
6
7
8
16
15
14
13
12
11
10
9
R8 47k
R1 10k
R9 1k
C7 100n
C8 10n
C1 100n
C2 100n
C3 100n
C4 100n
C5 100n
C6 100n
SW3
SW4
SW5
SW6
SW7
SW8
D2 1N4148
D3 1N4148
D4 1N4148
D5 1N4148
D6 1N4148
D7 1N4148
R2 10k
R3 10k
R4 10k
R5 10k
R6 10k
R7 10k