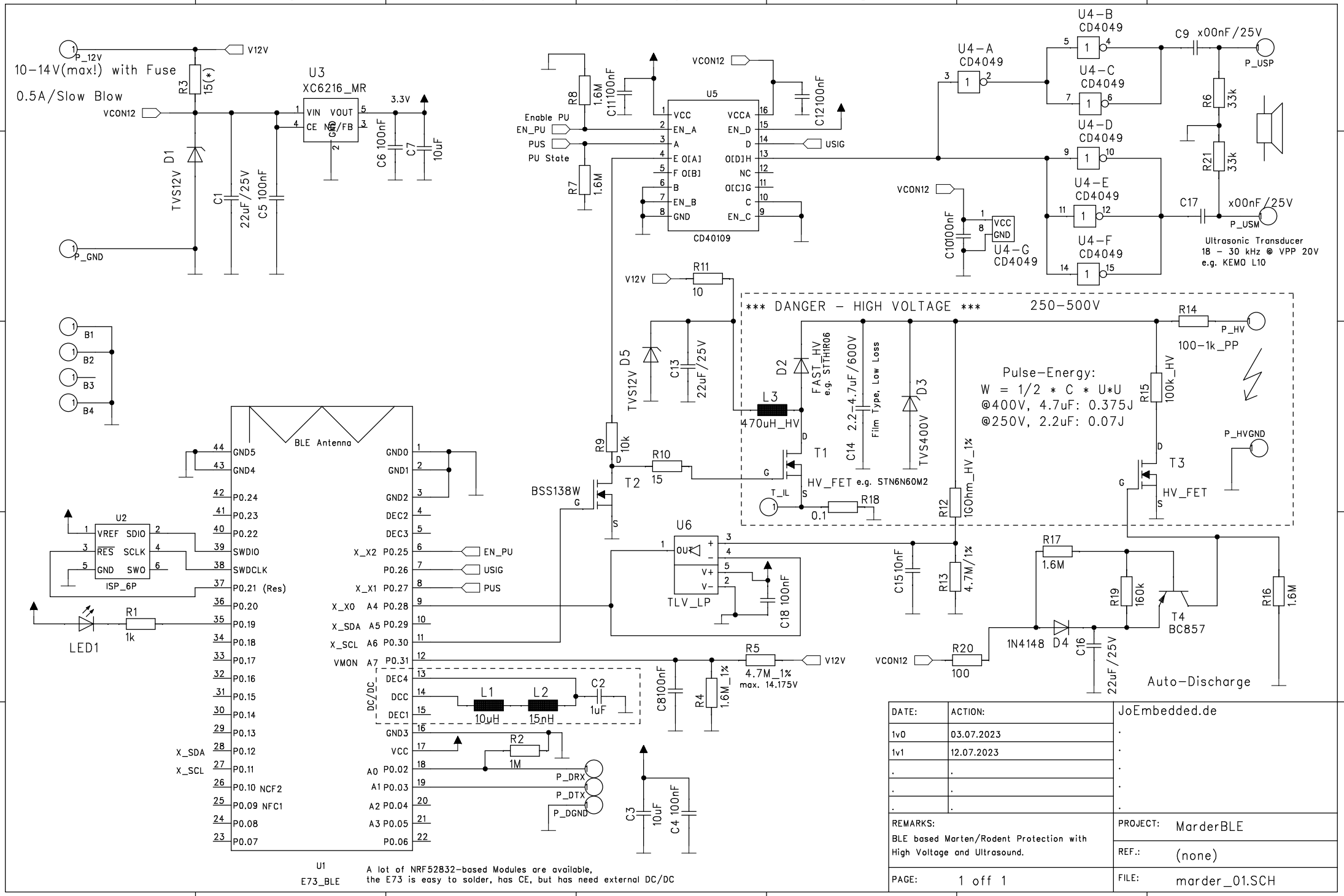

DATE:	ACTION:	JoEmbedded.de
1v0	03.07.2023	.
1v1	12.07.2023	.
.	.	.
.	.	.
.	.	.

REMARKS:
BLE based Marten/Rodent Protection with High Voltage and Ultrasound.

PROJECT: MarderBLE

REF.: (none)

PAGE: 1 off 1

FILE: marder_01.SCH