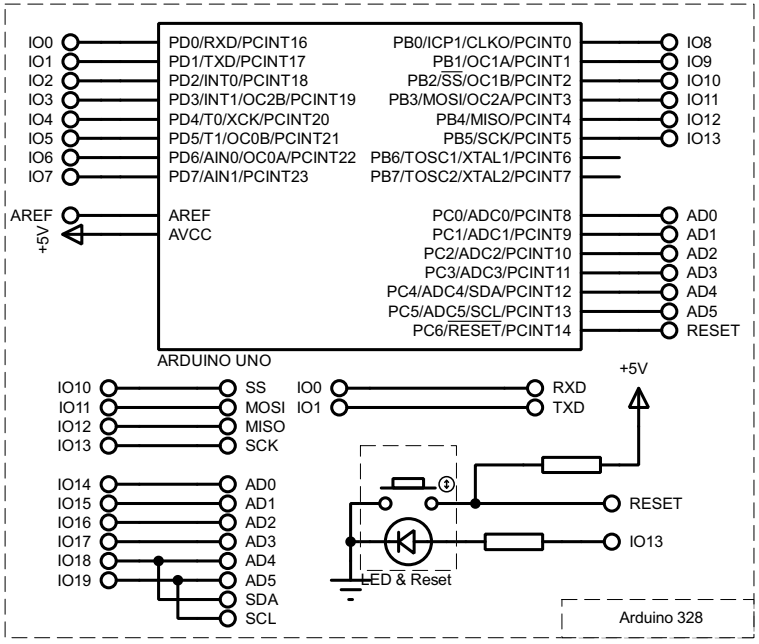

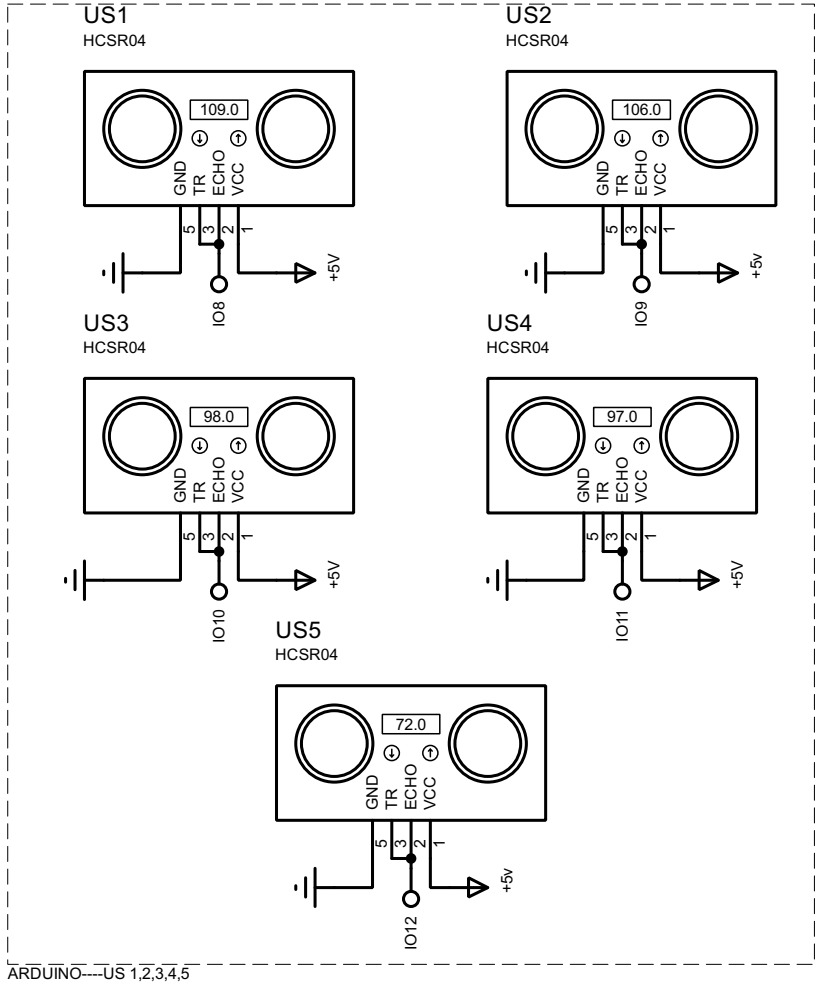

ARDUINO----US 1,2,3,4,5

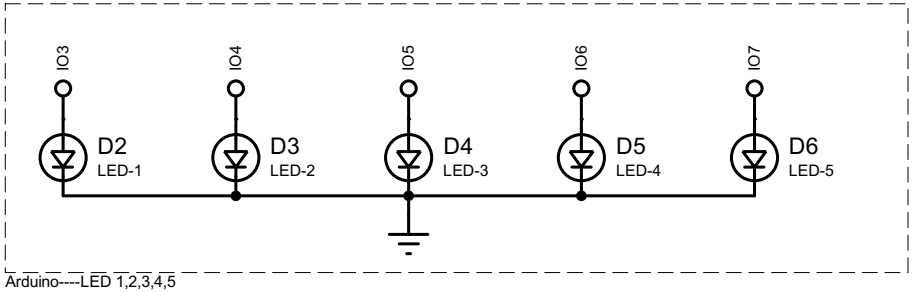

Arduino----LED 1,2,3,4,5