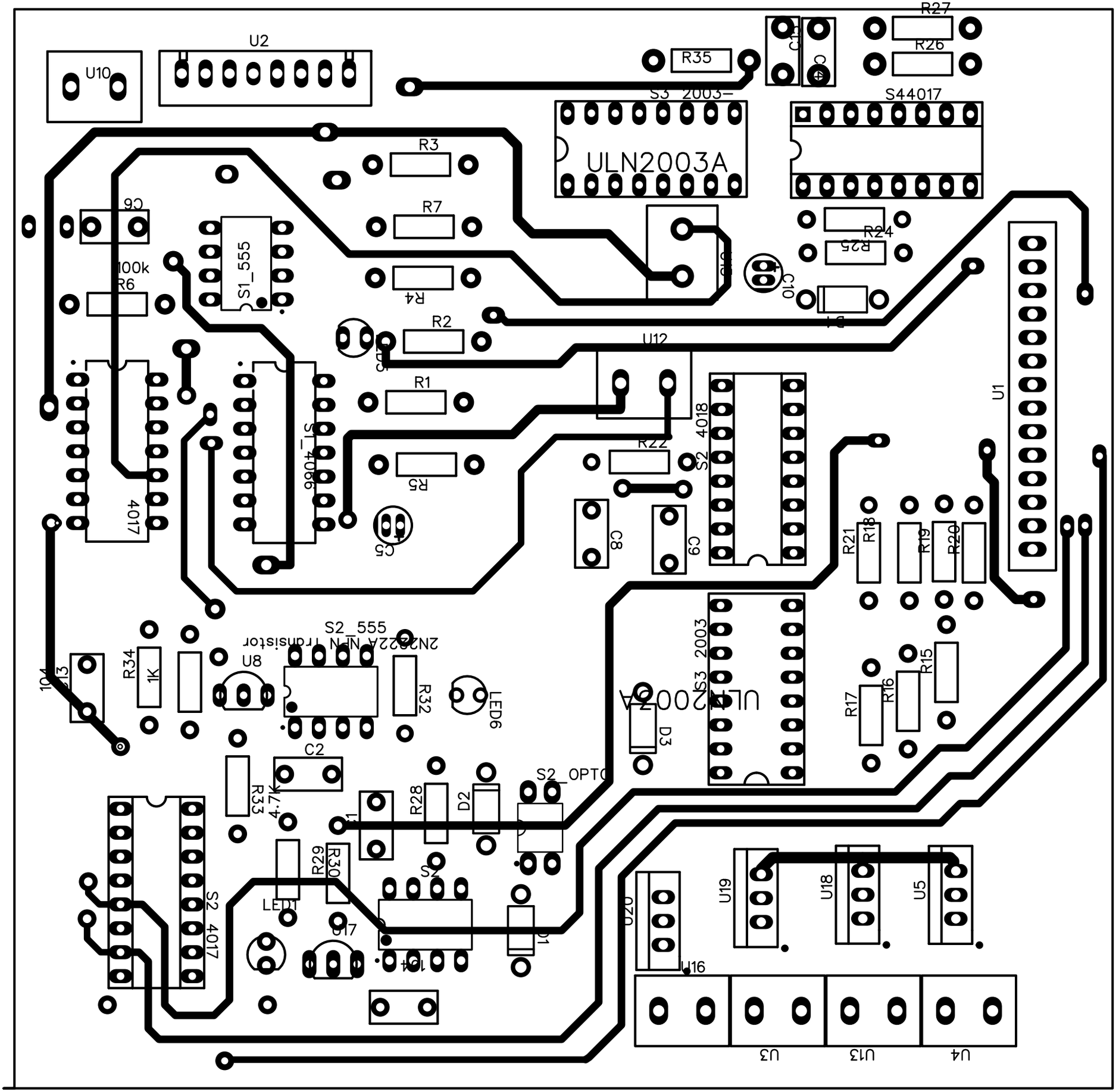
U10
U2
R35
R27
R26
S3_2003-
ULN2003A
S44017
R3
R7
R4
R2
R1
R5
R6
100k
C6
S1_555
S1_4066
4017
U12
R24
R25
C10
D4
U1
R22
S2_4018
C5
C8
C9
R21
R18
R19
R20
S2_555
2N2222A NPN Transistor
U8
R34
1K
R32
LED6
S3_2003
ULN2003A
D3
R17
R16
R15
C2
R33
4.7K
R28
D2
S2_OPTO
R29
R30
LED1
S2
U17
D1
S2_4017
U20
U19
U18
U5
U16
U3
U13
U4