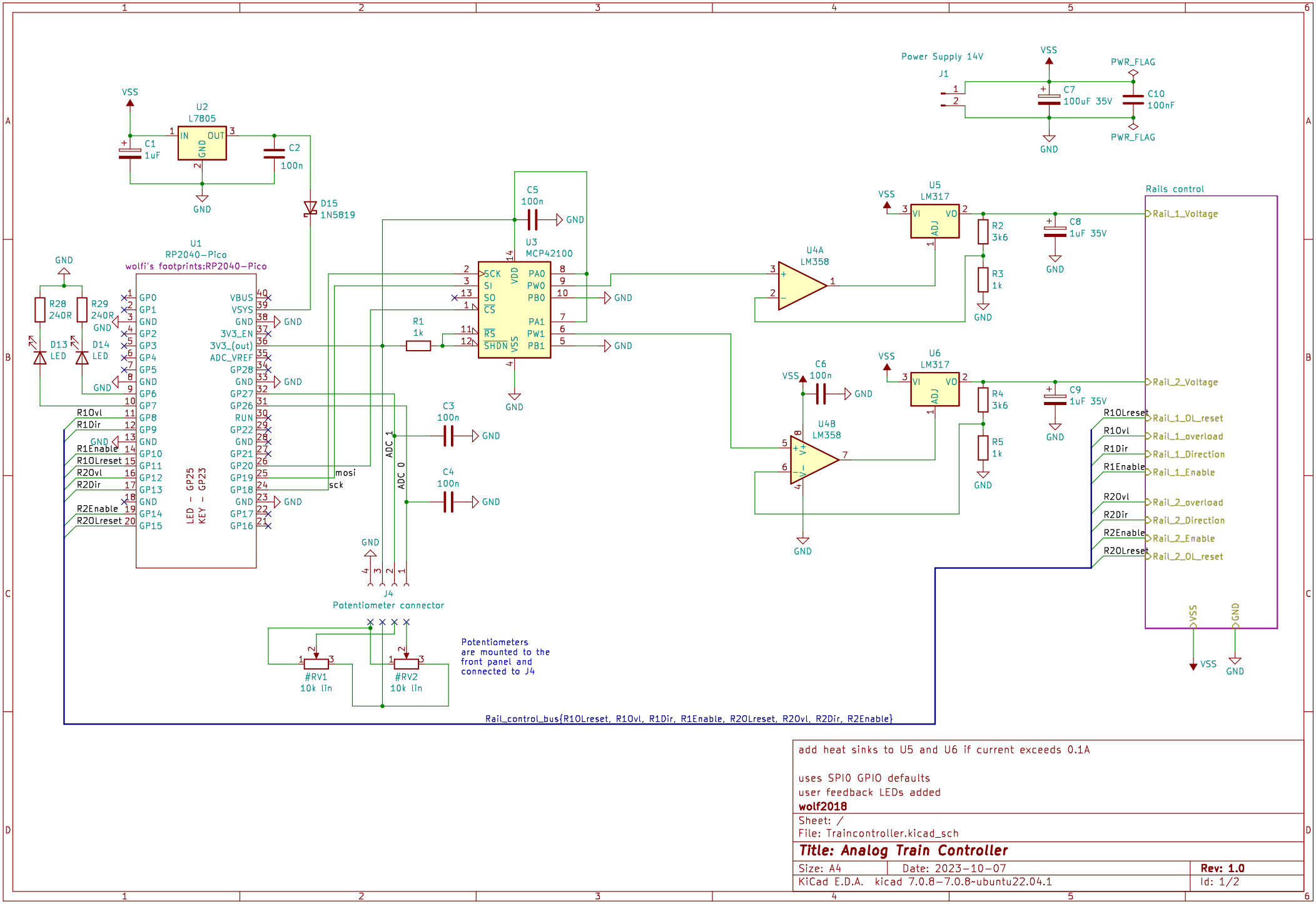

add heat sinks to U5 and U6 if current exceeds 0.1A

uses SPI0 GPIO defaults
user feedback LEDs added
wolf2018

Sheet: /
File: Traincontroller.kicad_sch

Title: Analog Train Controller

Size: A4	Date: 2023-10-07	**Rev: 1.0**
KiCad E.D.A. kicad 7.0.8-7.0.8~ubuntu22.04.1		Id: 1/2

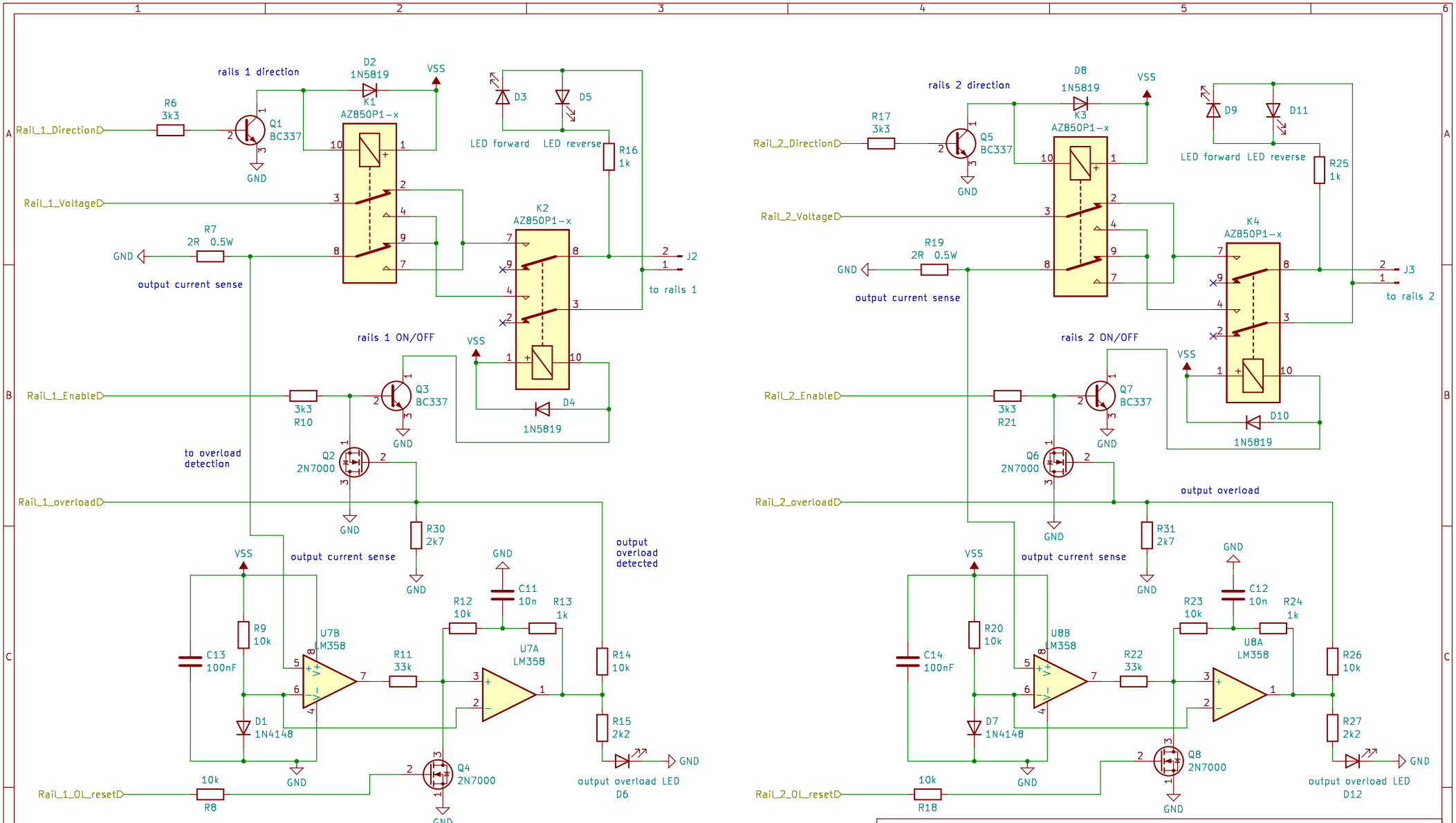

wolf2018

Sheet: /Rails control/
File: untitled.kicad_sch

Title: Track controller

Size: A4	Date: 2023-10-09	**Rev: 1.0**
KiCad E.D.A. kicad 7.0.8-7.0.8~ubuntu22.04.1		Id: 2/2